IRICEN MONOGRAPH NO. 3

ज्ञान ज्योति से मार्गदर्शन

To Beam As A Beacon of Knowledge

MONOGRAPH ON FIAT BOGIE

(LHB COACHES)

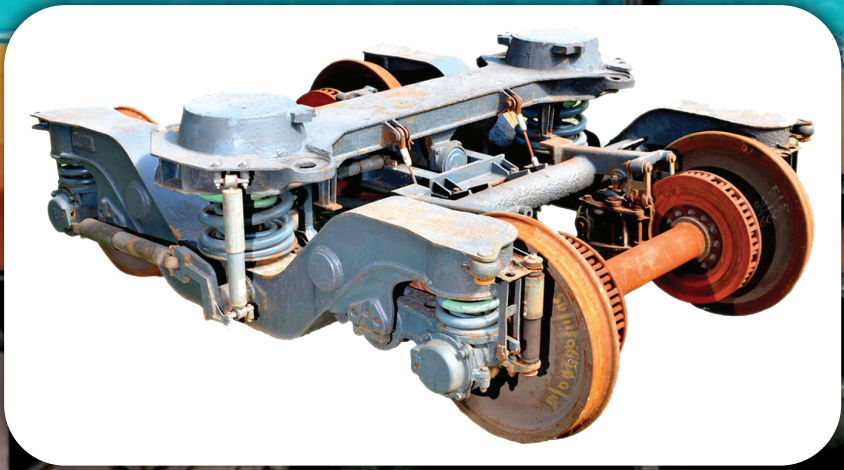

November 2022

INDIAN RAILWAYS INSTITUTE OF CIVIL ENGINEERING

PUNE 411001

Published By
Indian Railways Institute of Civil Engg.
11-A, South Main Road, Koregaon Park, Pune 411 001.

FIRST EDITION : 2016

SECOND EDITION : NOVEMBER 2022

Price ₹ 100/-

ज्ञान ज्योति से मार्गदर्शन

To Beam As A Beacon of Knowledge

MONOGRAPH ON FIAT BOGIE

(LHB COACHES)

November 2022

INDIAN RAILWAYS INSTITUTE OF CIVIL ENGINEERING,
Pune 411001

FOREWORD TO SECOND EDITION

It has been endeavour of IRICEN to bring out publications which are useful to field engineers. It is necessary to gain adequate knowledge regarding other concerned departments like Mechanical, Electrical and Operating for proper coordination on safety & asset reliability. IRICEN is also offering comprehensive lectures on coordination aspects for day-today maintenance, joint inspections with mechanical department, derailment and unusual case studies. In this regard IRICEN has published a series of monographs for the field engineers in 2016.

This publication needed revision to explain the details of different components and also due to change of technology & revision of codes/standards of LHB. The information provided in this monograph have been collected from latest instructions on different components of FIAT Bogie. Content on existing and new development in the field has been incorporated in greater detail to make it more useful. I appreciate the efforts of Shri Anil Kumar, Sr. Professor / Track-II, Shri Mathew varughese / Senior Instructor and Shri Vinod Hirave/ Senior Instructor, who put commendable efforts in correcting the draft and scrutinising the manuscript. I hope this revised publication will satisfy the daily need of field engineers.

Pune
November, 2022

Ashok Kumar
Director General
IRICEN, Pune

FOREWORD

It has been endeavour of IRICEN to bring out publications which are useful to field staff. The book published by IRICEN on the subject of "Investigation of Derailment" is hugely popular amongst field staff of various disciplines. IRICEN is now issuing series of Monographs for various Rolling Stock commonly used for Coaching, Freight and Loco operations for the guidance of field staff. First Monograph in the series for ICF All-Coil Coach has already been published. Second in this series is the Monograph on CASNUB Bogie. The third monograph in this series is now being brought out is on FIAT Bogie (LHB Coaches).

The purpose behind bringing out these Monographs is to educate the field staff and increase their awareness level as present day Accident Proforma of Accident Manual do not have adequate measurements for various Rolling stock components which may be required to determine cause of accident. I hope that the Railwaymen from various disciplines would find this publication useful.

Pune
November, 2016

N. C. Sharda
Director
IRICEN, Pune

PREFACE

With the view to educate field officials and increase their awareness, it is proposed to issue series of Monographs for Rolling stock commonly used in Coaching, Freight and Loco operations.

Third Monograph in this series is on FIAT Bogie for LHB Coaches which is the main stay of premium passenger train operations on Indian Railways. The contents in the Monograph are mainly from existing "Maintenance Manual for BG coaches of LHB Design", "IRCA Part III" and text book on the subject of "Investigation of Derailment" published by IRICEN.

For more detailed knowledge on the subject readers are advised to refer to Maintenance Manual for Coaches and IRCA Part III. I am grateful to Shri N. C. Sharda, Director, IRICEN for giving me the opportunity for preparation of this Monograph and also for his encouragement and guidance from time to time for bringing out this publication. Thanks are also due to Shri A. K. Patel, Professor Track-1, IRICEN, for checking the drafts and for giving his valuable suggestions. I am thankful to faculty and staff of IRICEN who have contributed immensely for this publication. Efforts taken by Shri Mathew Varughese, Senior Instructor in correcting the draft and scrutinizing the manuscript are also appreciated. Suggestions from readers to improve the contents are welcome and can be sent to mail@iricen.gov.in which will be taken into account while bringing future editions.

Pune
November, 2016

S. K. Agarwal
Professor (Works)

CONTENTS

1 General Description

LHB (Linke Hoffman Bush, Germany) coaches with FIAT (Fabric Italina de Automobil Torino, Switzerland) bogies were imported along with technology transfer from M/s. ALSTOM, Germany during 2001 and now being manufactured indigenously. These coaches are superior w.r.t. passenger comfort, safety, speed, corrosion, maintenance and aesthetics. There are many variant of LHB coaches being run on Indian Railways and the latest list of coaches is placed at Annexure – III. The clearance/ replacement/ maintenance limits mentioned in this book may vary for different variants and can be referred from LHB Maintenance Manual Volume II, July – 2022, as amended till date.

Full view of LHB Coach

2 FIAT Bogie

The FIAT bogie is two-axle type and two stage suspension bogie. The FIAT Bogie frame is solid welded frame. This bogie is designed for maximum operating speed of 160 km/h and has potential for operation up to 200 km/h. Bogie is capable to permit the coach body to negotiate curve of 175 m radius at speed potential of 40 km/h and 1 in 8.5 turn out in either direction at 30 kmph.

The coach body directly rests through bolster beam on the secondary stage helical springs/ air springs, which rests on Y shaped side beam of bogie frame. The bogie frame rests on primary stage helical spring which is resting above the axle box crown. Axle guidance is provided by an articulated control arm through a resilient bush. The tractive and braking force from axle to bogie frame is transferred through articulated

control arm of primary suspension system.

The bogie is provided with disc brake system, tapered roller bearing and permanent earth connector to avoid passage of current through roller bearings. It is also provided with wheel slip protection arrangements.

2.1 Technical Data of FIAT Bogie

Parameter	Unit	Value
Axle distance	mm	2560
Diameter of new wheels	mm	915
Diameter of max. worn wheel	mm	845
Distance between the wheels	mm	1600
Brake disc diameter	mm	640
Bogie width	mm	3030
Bogie length	mm	3534
Bogie weight	kg	6300

2.2 Transmission of forces – The mechanism of transferring the forces from/to coach is as follows-

Forces	Load transmission
Vertical forces	Body – Bolster - Secondary springs - Bogie frame - Primary springs – Axle bearing control arm.
Lateral forces	Body – Bolster - Secondary springs - Bogie frame - Ball joint control arm - Axles
Longitudinal forces - Traction and Braking	Body – Bolster - Traction center–Traction lever -Traction rods - Bogie frame - Control arm - Axles

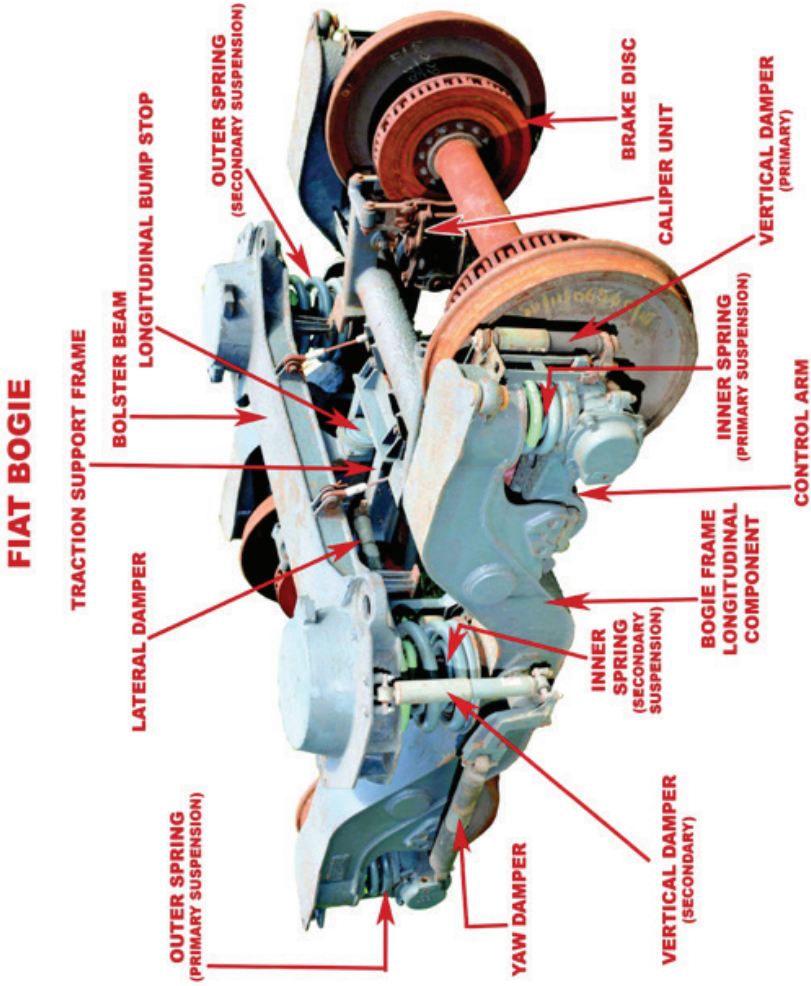

FIAT bogie assembly

3 Bogie Frame

The bogie frame is a solid welded frame made by steel sheets and forged or cast parts. The bogie frame consists of two side members of 'Y' shaped longitudinal beam connected by two tubular cross steel beam members which also support the brake units, support frame, cable, brake gear etc. The various supports which connect the different bogie components are welded to the frame. The bogie frame rests on the primary suspension system and supports the vehicle body by means of a bolster beam. The bolster beam is connected to the bogie frame by the secondary suspension. The bolster beam and the bogie frame are linked by four Safety cables with the help of pins and washers.

3.1 Items to be checked

Item	To be checked for	How to check	Repercussion
Bogie frame	Crack, Damage at critical locations and Loose connection	Visually DPT	Increased angularity, Uneven forces, Increased oscillations
Longitudinal beam, Cross beam			
Brake support, Damper support, Support frame and Anti-roll bar support			
Bogie bolster and its subassemblies, Bracket			
Safety cable			

4 Body-Bogie Connection

A special type of body-bogie connection has been provided between coach body and bolster. This connection consists of disc, shim, hemispherical ball, swinging link pin, link pin, etc. This connection is capable to cater for the acceleration value upto 0.5g in lateral and longitudinal direction. Beyond that value, a bracket comes into action between bogie bolster and coach body.

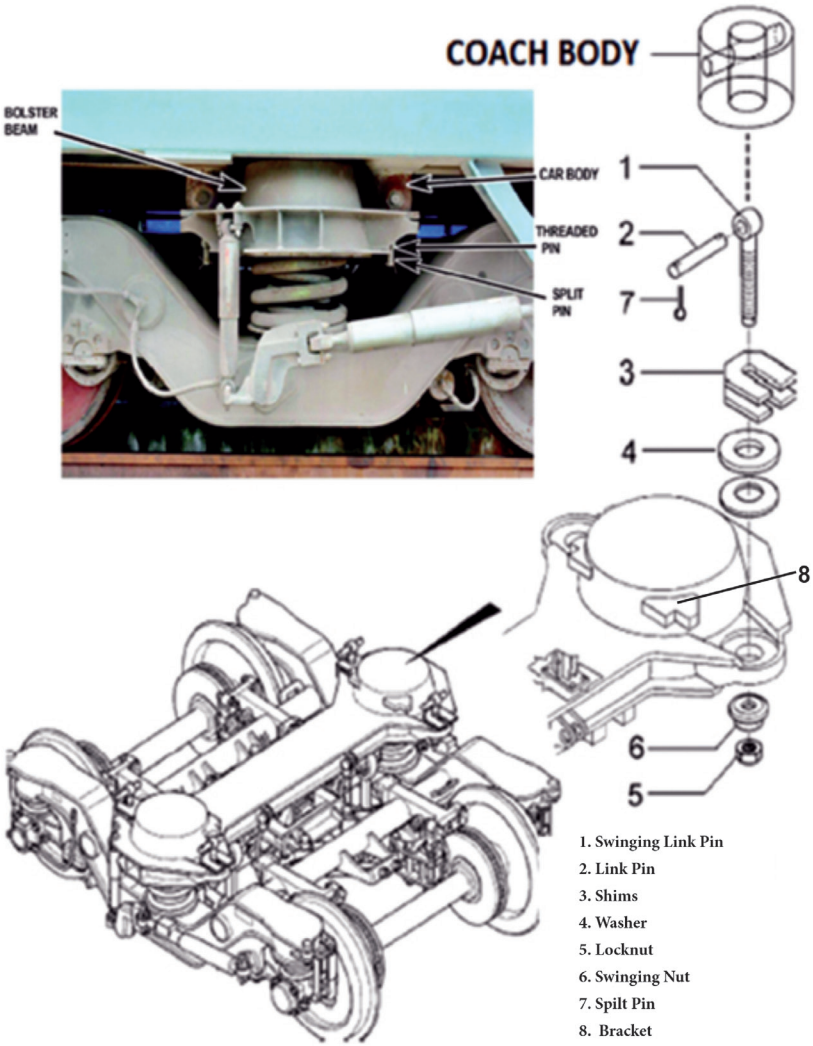

Exploded view of Bogie body connection

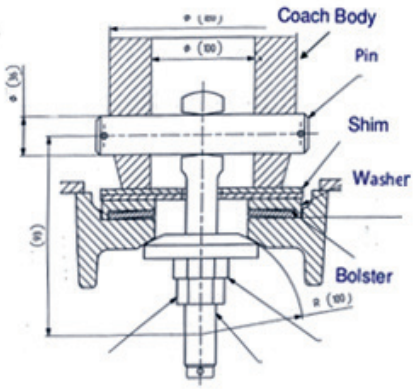

Connection between body and bogie

4.1 Items to be checked:

Item	To be checked for	How to check	Repercussion
Threaded pin, Shim, Washer, Lock nut, Split pin	Wear, Loose connection, Damage	Visual	Uneven transfer of forces, Increased oscillation

5 Secondary Suspension System

The secondary suspension enables lateral, vertical displacements and rotation of bogie with respect to coach body. The secondary suspension is provided between the coach body and the bogie frame. This system consists of two sets of flexi coil spring pack/air spring, two vertical dampers, one lateral damper, two yaw dampers, support frame, anti-roll bar and two bump stops.

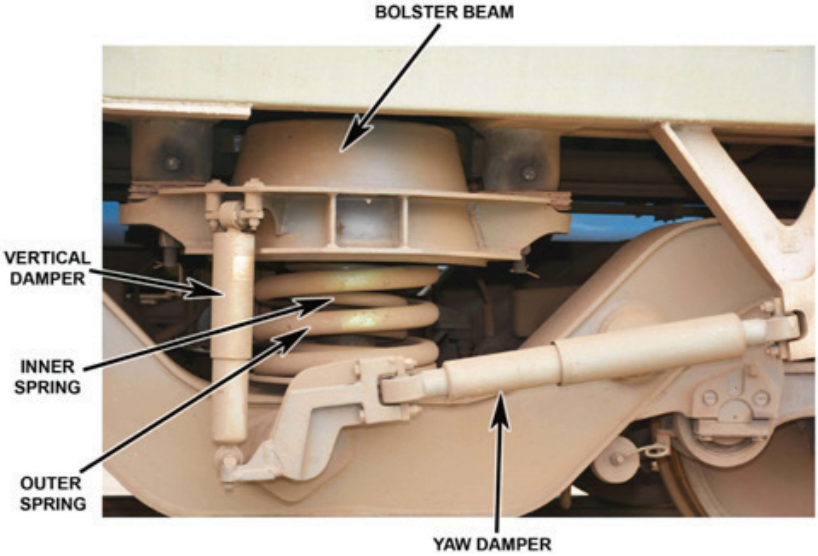

Side view of secondary suspension System

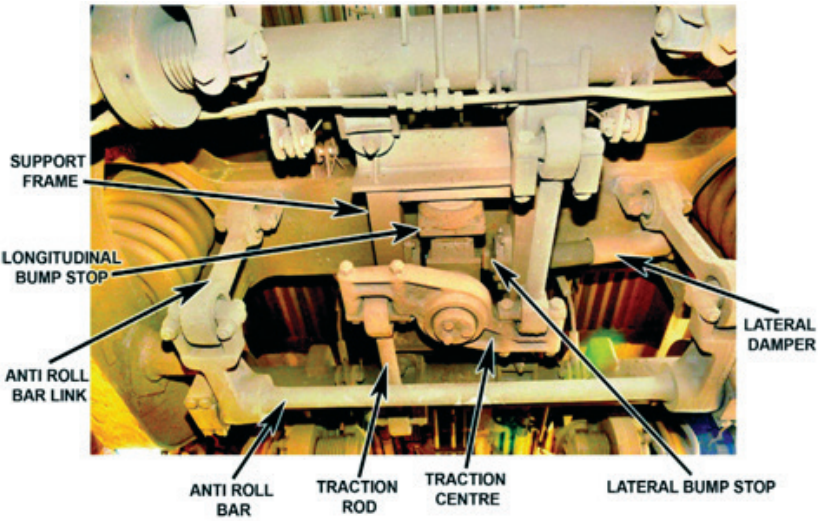

Bottom view of secondary suspension arrangement

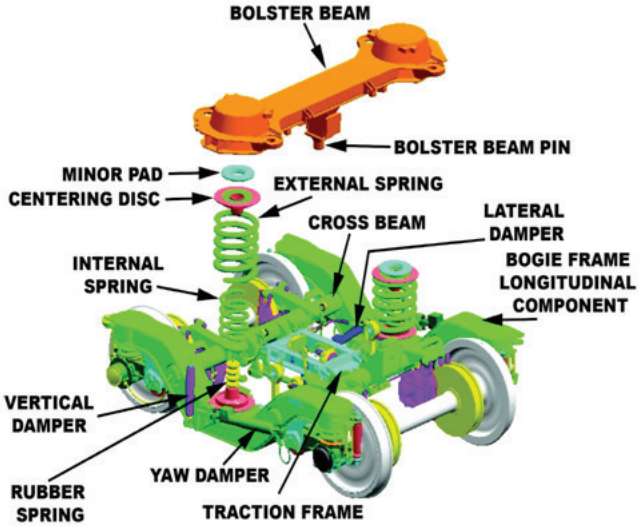

Exploded view of secondary suspension

5.1 Bolster Beam

The bolster beam is connected with the coach body and rests on the flexi coil spring packs/air springs (which are supported over the 'Y' frame). The bolster beam is also linked to the bogie frame through two vertical dampers; a lateral damper, an anti roll bar, four safety cables and the traction rods. The bolster beam transfers all the forces from coach body to bogie.

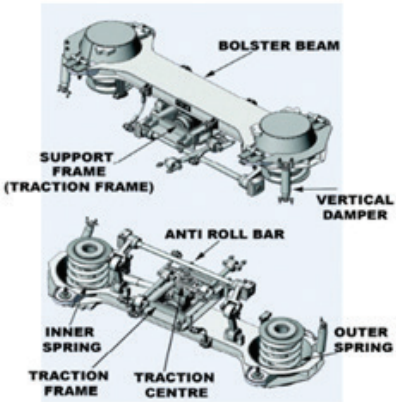

Bolster beam

5.1.1 Items to be checked:

Item	To be checked for	How to check	Repercussion
Bolster beam	Damage, Crack, Breakage	Visual, DPT	Uneven load transfer, Large displacement/ Oscillation, Offloading etc.

5.2 Secondary Spring

The Secondary Spring system contains either Flexi coil nested spring or Air springs. They are placed between Y frame and Bolster beam.

5.2.1 Flexi coil nested spring

Each spring pack is made of an external spring, an internal spring and a rubber bellow spring placed inside the internal spring. They are provided to transfer the lateral load also along with vertical load. The spring pack is mounted and positioned through the centering disc and rubber pad (miner pad) on both top and bottom of pack.

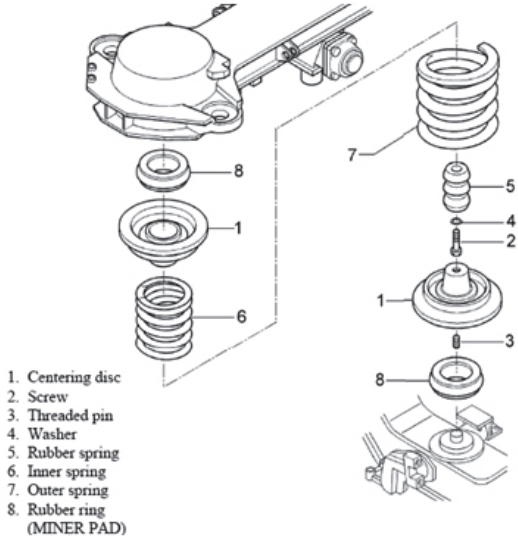

Exploded view of Secondary Spring

Pairing of Flexi-Coil Springs -

The secondary suspension flexi coil springs need to be coupled based on the spring height under test load and the numerical value of alignment deviation.

The height of the spring under test load and the value of alignment deviation (in mm) are indicated on abronze/ copper or brass tag available in the upper position of the spring.

The positive direction of the alignment deviation is indicated by an Aluminium plastic adhesive band provided in the upper position of the spring.

Positioning of positive direction of the alignment deviation –

The direction of alignment deviation is to be ensured while installing springs on the bogie. The Aluminium band indicating positive direction of the alignment deviation of outer and inner spring is placed outward and inward respectively, as shown in drawing below-

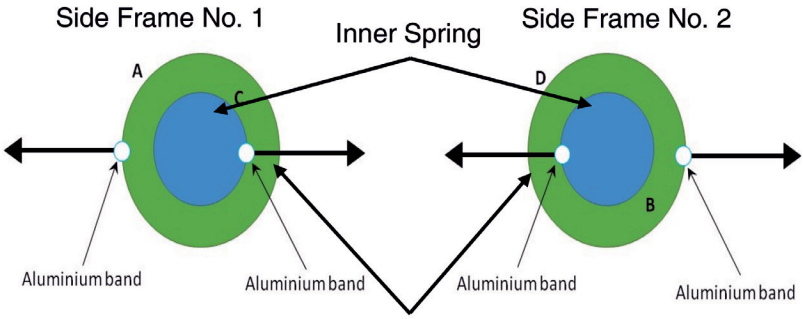

Note – Grouping of Outer and Inner Springs should be such that higher alignment deviation are nested together

The coupling instructions for springs are given below:

Parameter	Spring	Rejection Limit	New
Difference in Alignment Deviation	Outer	8mm (max)	4mm (max)
	Inner	Not to consider	8mm (max)

Difference in Height Under Test Load	Outer	2 mm (max)	2mm (max)
	Inner	Not to consider	

Stamping details on spring -

The manufacturing details of each spring is engraved at the end coil of spring, which may be referred in case technical analysis of spring is warranted. The details are as under -

Material code:* (e.g. CV, CM, SN)

Manufacturer's initials: *** (e.g. ABC)

Month & year of production: ****(e.g. 1219)

Drawing code: ***(e.g.F01)

Heat code: ****(e.g. 001)

Colour Coding of springs -

All coil springs to be used in LHB coaches are grouped in different colour codes as per their basic properties. The colour codes for different coaches needs to be observed. The detailed properties for different secondary springs is enclosed as Annexure- II.

5.2.2 Rubber bellows spring

Rubber bellows spring is provided with the centring disc of secondary suspension system and is parallel to the flexi coil spring, at the center. It helps in reduction of stresses in secondary spring in loaded condition in vertical direction.

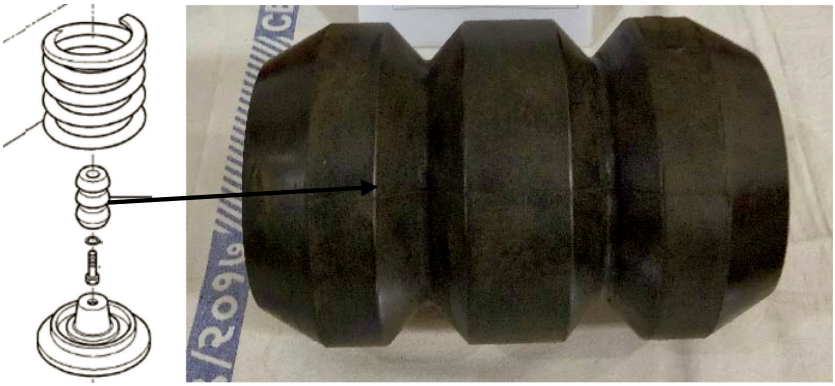

Rubber bellows spring

5.2.3 Centering disc

Two number of centering discs are provided in secondary suspension system arrangement, one each on top and bottom.

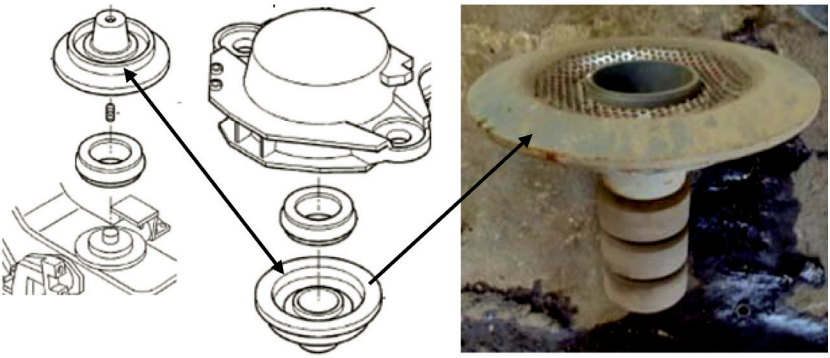

Centering Disc

5.2.4 Rubber pad / Miner Pad / Rubber ring

Rubber pad or Miner pad or Rubber ring is provided at the top and bottom of the secondary suspension system, adjacent to the Centering disc. It provides additional flexibility and damping in suspension system.

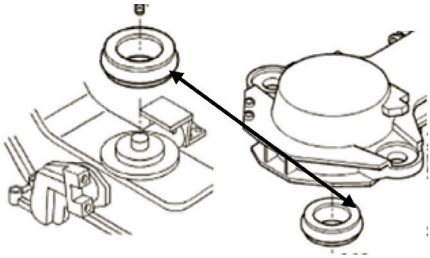

Rubber pad/ Miner pad

5.2.5 Items to be Checked:

Item	To be checked for	How to check	Repercussion
Steel Coil Spring and Rubber spring	Damage, cracks and breakage	Visually	Weak, Ineffective, Differential loading, Tilting of coach
	Permanent set	Testing of spring for free height	
	Load deflection characteristics	Testing as per specification	
Rubber spring	Crack Feature: Size Horizontal length: ≯30 mm Vertical length: ≯10 mm Crack depth: ≯ 4 mm	Calliper	
	Ageing, Damage, Detachments	Visually	
Rubber ring and Miner pads	Ageing, Damage, Detachments	Visually	Weak, Excess play. Tilting of coach, Hitting of Vertical bump stop
	Crack Feature: Size Horizontal length: ≯10 mm Vertical length: ≯40 mm Crack depth: ≯ 5 mm Height 90 mm to 95 mm	Calliper	
springs	Paint colour for identification of springs	Visually, match with the group colour	Poor suspension and may lead to offloading

5.2.6 Air Spring

Air spring uses the properties of air for the

cushioning effect. It is basically pressurized air chambers made up of rubber bellows which maintain constant height under varying loads. Enclosed pressurized air in a predefined chamber called air spring, provides various suspension characteristics including damping.

In case of coil spring, under high payload situation, space constraint become critical, leading to the use of stiffer springs resulting in unsatisfactory ride behaviour and reduced speed potential. Unlike steel spring, air springs retain their height under changing loads. The air springs also have inbuilt emergency rubber springs. The low natural frequency of air spring suspension remains virtually constant. Air springs through their control mechanism, offer a load proportionate stiffness, constant floor height and prospects of better ride behaviour with higher speed potential.

The air springs are colour coded according to loading capacity, as under -

SN	**Capacity**	**Colour**
1	180 KN	Grey colour
2	160 KN	SKY blue colour
3	140 KN	Red colour
4	120 KN	Light green colour

The air springs should be placed in respective bogie as per their classification. In a coach, capacity of all air springs must be same. On a bogie, both air spring should be of same make.

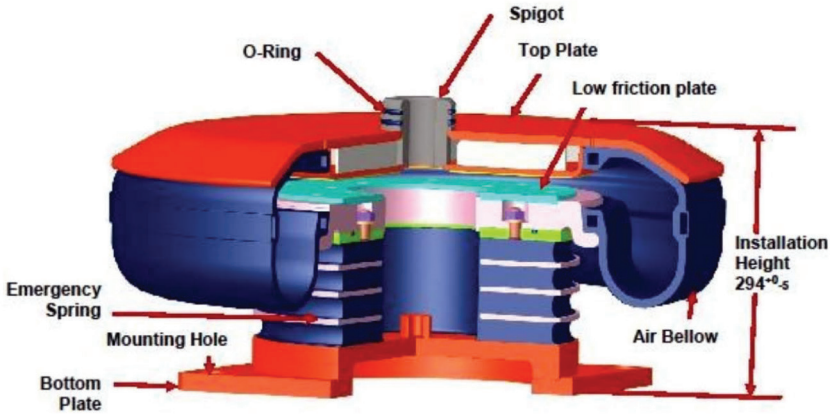

Air Spring

5.2.7 Installation lever & Limiting valve

A control rod (installation lever) and a limiting valve is required with air spring for ensuring adequate spring height/ air pressure incase of variation of load on the coach to ensure horizontal level of coach and proper floor height. With changing loads air spring reacts initially by changing the distance between air spring supports and vehicle body. The levelling valve is, in turn, actuated, either by getting the compressed air pressure to the air spring or releasing air pressure from it to the atmosphere. This process continues until original height is restored.

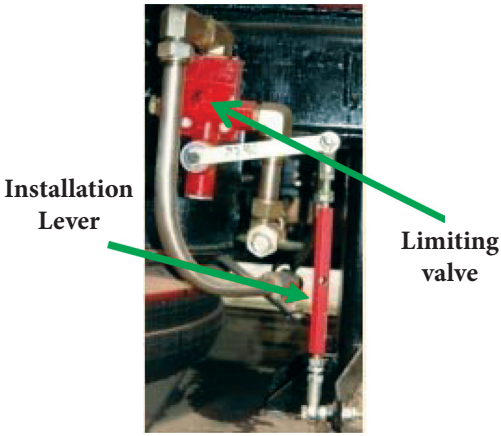

Installation lever & Limiting valve

5.2.8 Duplex Non return valve

A two way non-return valve is provided between the two air springs to all balancing of air pressure in case of failure of any of the limiting valve resulting into differential air pressure of 1.5 kg/cm2.

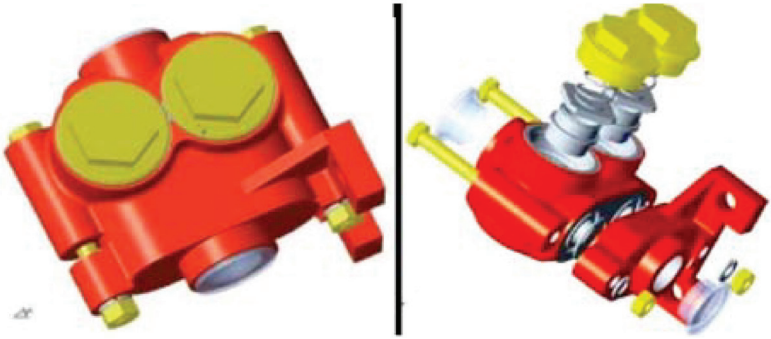

Duplex Non return valve

5.2.9 FIBA (Failure indication cum Brake application)

It is an emergency braking device which gets actuated if air pressure in spring falls by 1.0 kg/cm2 from its designed or limiting value depending upon type of coach.

FIBA device with activation indicator

5.2.10 Items to be Checked:

Item	To be checked for	How to check	Repercussion
Air spring	Damage, Bulging of bellow, Cracks, Ageing,	Visually	Ineffective suspension, Differential loading, Higher oscillation, Poor damping
	Height = 289 – 294 mm	Measurement	
	Leakage, Water collection in bellow, Corrosion of bottom and top mounting plate	By opening the Air spring	
Air suspension pipe	Leakage	Using soap water	
Emergency spring	Cracks, Ageing, Detachments	Visually	
Bogie clearances	Height from Rail level	Measurement	Defective suspension, Overloading

Installation lever & other fixtures	Height to ensure proper air spring height, Damage to fixture	Visual, Measurement	Delayed lifting of springs, Tilting of Coach
Levelling Valve	Leakage / Chocked	Visual	Excess height – Stiff Air leakage - Less Stiff but poor suspension
Duplex Non return valve	Chocking, Damage, Crack	Visual, Pressure Gauge in shed	No safety against Coach tilting In case of failure of Installation lever / Levelling valve.
FIBA (Failure indication cum Brake application)	Actuation during drop of air spring pressure	Working of FIBA, Isolating cocks	Non-application of brake in case of air spring failure

5.2.11 Speed potential in en-route failure of secondary spring -

Air spring- In case of heavy leakage or deflated air spring, the defective bogie is to be isolated with the help of isolating cock and the coach may be permitted with speed restriction of 60 kmph upto terminal point for maintenance for a maximum distance of 1000 Km.

Outer fexi-coil spring- The Coach can be permitted to run upto the destination with a restricted speed of 90 kmph escorting by TXR staff, subject to following stipulations-

a) Only one spring is in broken condition.

b) The spring is not displaced from its position.

c) Bump stop gap should not be zero.

d) The spring is broken at only one location.

5.3 Secondary Damper

Each FIAT bogie uses two vertical dampers, one lateral damper and two yaw dampers in secondary suspension system. These are hydraulic shock absorbers to damp the accelerations or vibrations and opposing force caused due to track irregularities, Suspension characteristics & Loading pattern specially at higher speeds.

5.3.1 Vertical damper

They are provided parallel to the secondary spring, joining the bolster beam and'Y' frame of Bogie. They are two per bogie to damp the vertical oscillations of Bogie.

1. Vertical damper
2. Upper screw
3. Bolster beam
4. Bottom screw
5. Bogie frame
6. Washer
7. Nut

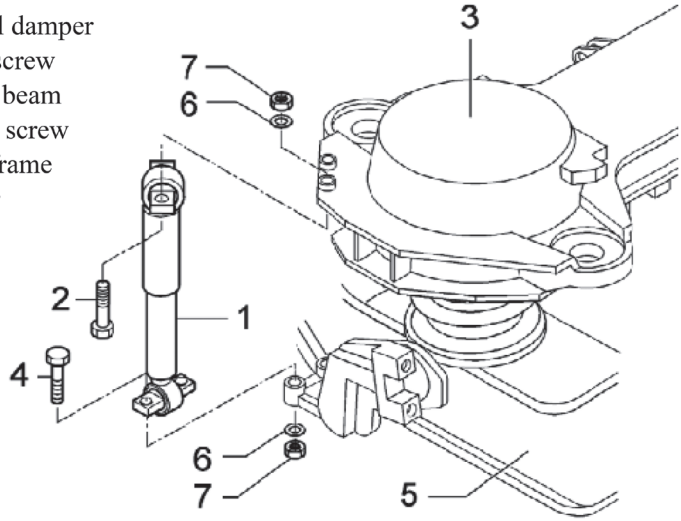

Exploded view of Vertical damper

5.3.2 Lateral damper

They are provided, connecting the support frame and bolster beam on one side of Bolster. It is one per bogie to damp the lateral oscillations. The position of lateral damper is in opposite side in leading and trailing bogie.

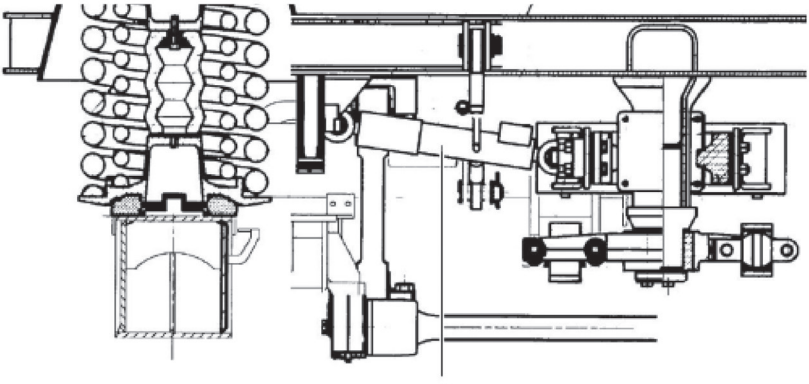

1. Secondary Lateral damper
2. Screw
3. Bolster beam
4. Washer
5. Nut

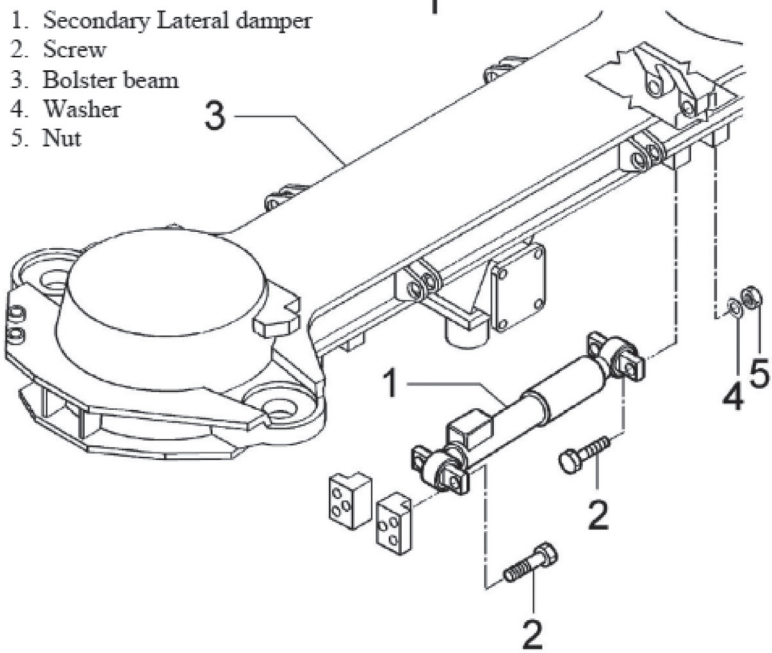

Exploded view of Lateral damper

5.3.3 Yaw damper

They are provided outside the Y frame, connecting the bogie frame side support and coach body support.

They are two per bogie placed in same direction to damp the Yaw and Rolling oscillations of Bogie.

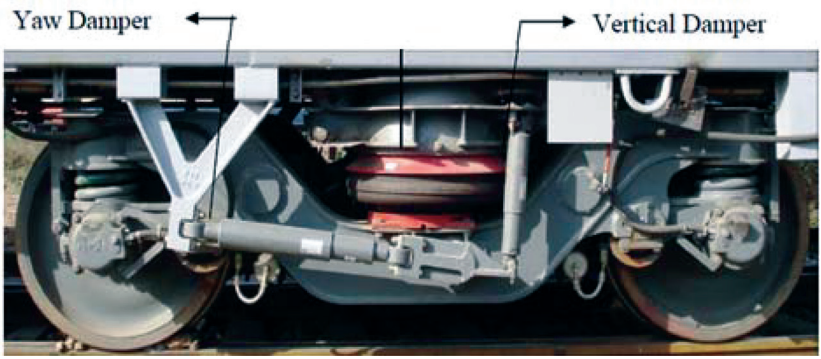

Yaw Damper

5.3.4 Items to be Checked:

Item	To be checked for	How to check	Repercussion
Damper (Replacement after 6 years is mandatory)	Deformation, Damage, Crack, Oil leakage, Ageing	Visually	Large & persistent oscillation
	Stiffness	Laboratory Tests	Stiff- Poor Curving Properties Loose – Persistent oscillation
Fixings/ fasteners and rubber elements	Loose, Missing, Crack, Ageing, Detachments	Visually	Excessive play, Damper will be ineffective

5.4 Anti-Roll Bar

The anti-roll bar is connected to the bolster beam with link bar and to the 'Y' frames with side bracket inside the bogie at both ends. It is connected to side bracket with a bearing for smooth rotation. It balances differential vertical movement of bogie / bolster on any of the secondary spring, by virtue of torsion property of the anti-roll bar and thus resist the rolling motion of coach.

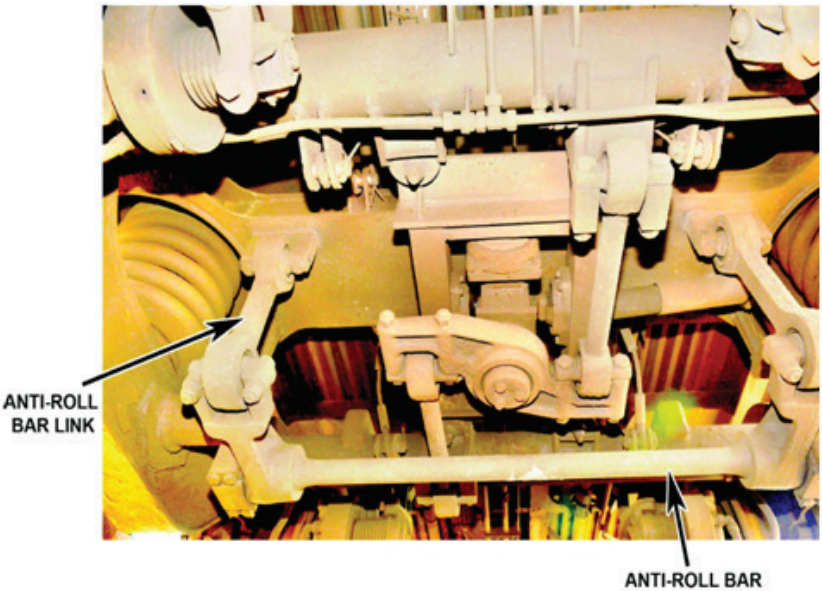

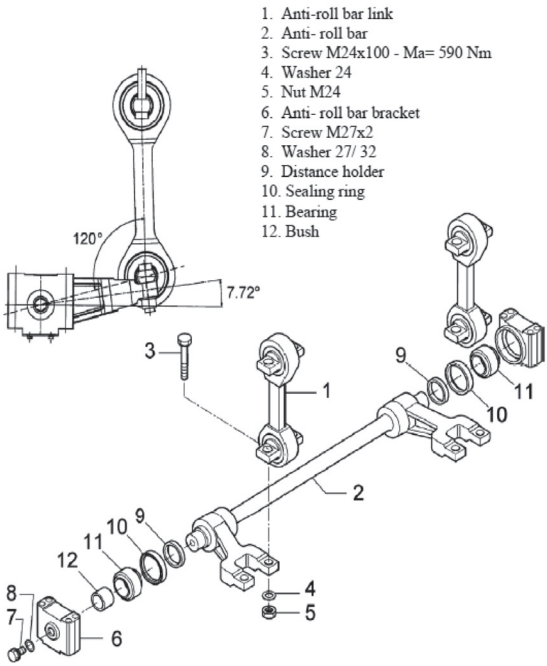

Exploded view of Connection of Anti roll bar with Y Frame

1. Anti- roll bar
2. Bolster beam
3. Frame support
4. Screw M24x100 – Ma = 590 Nm
5. Anti-roll bar link
6. Screw M16x160/ 44 - Ma= 170 Nm
7. Anti- roll bar bracket
8. Washer 16

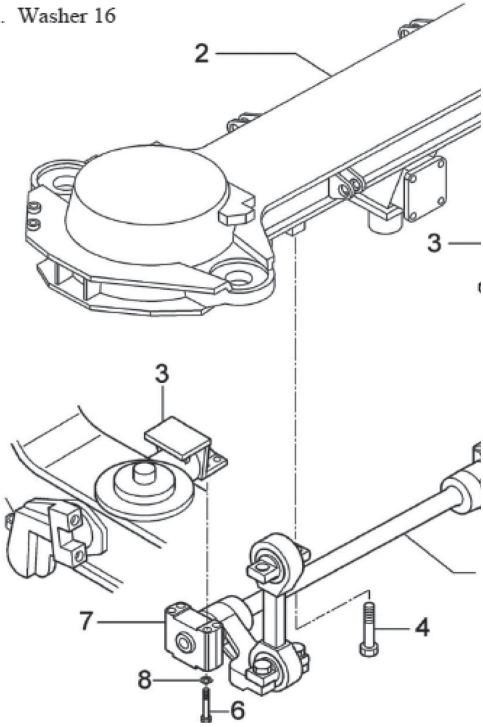

Exploded view of Connection of Anti roll bar with Bolster

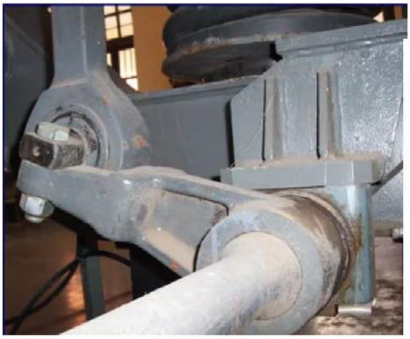

Anti roll bar

5.4.1 Items to be Checked:

Item	To be checked for	How to check	Repercussion
Fixing and fastener-Link and Bracket pin, Screws	Loose, Missing, Crack, Damage and Corrosion	Visually, DPT	Excessive rolling oscillation, Offloading
Rubber and Metal bonded component – Ball Joint, Bush, Seal, Fastener.	Loose, Missing, Damage, Ageing, Detachment, Crack (Depth of Crack $\not>$ 10 mm)	Visually, Callpers	Excessive rolling oscillation, Offloading
Bearing	Grease oozing out	Visually	Pitching oscillation

5.5 Vertical Bump Stop

Vertical bump stop is provided between Bolster beam bottom and Side frame bracket to support the bolster in case of excessive deflection of secondary spring under dense crush load or failure of spring. It has a shop clearance of 90 to 95 mm.

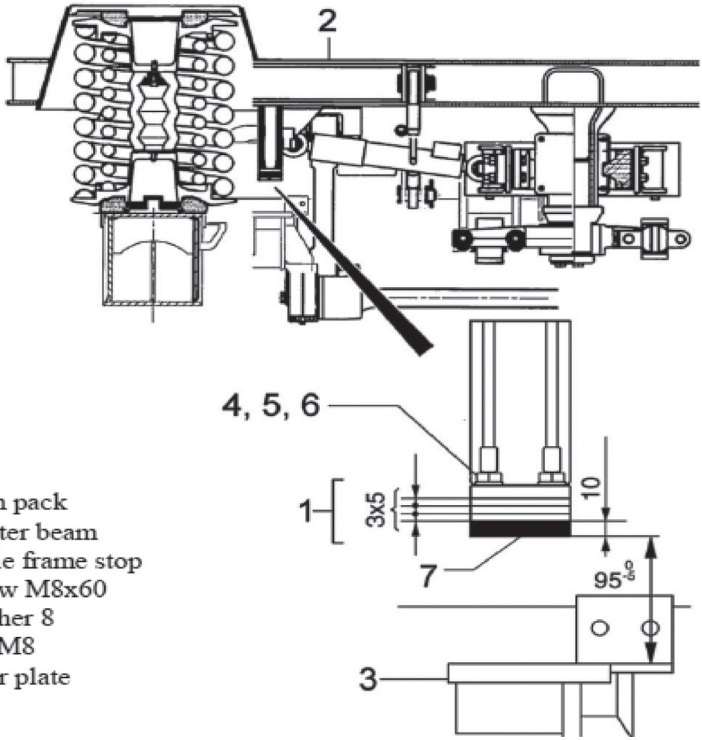

1. Shim pack
2. Bolster beam
3. Bogie frame stop
4. Screw M8x60
5. Washer 8
6. Nut M8
7. Wear plate

Exploded view of Vertical Bump stop

5.5.1 Items to be Checked:

Item	To be checked for	How to check	Repercussion
Bump stop, Support, Shim, Fittings	Loose, Missing, Crack, Damage, Detachment and Corrosion	Visually	Excessive rolling oscillation, Tilting of Coach

5.6 Traction Assembly

The traction assembly consists of support frame (traction frame) and traction center. The traction center transmits traction and braking forces between bogie frame and coach body located at the center of the bogie approximately in the plane of axle. The coach body is connected to the traction center through bolster beam pin; while traction center is

connected to cross beam. The longitudinal and lateral displacements of the bolster beam are limited by four bump stops (two longitudinal and two laterals) in conjunction with support frame.

5.6.1 Support frame

A fabricated rectangular frame connected to two cross members of bogie, which restricts excessive longitudinal and lateral movement of Bolster in case of large longitudinal and lateral forces from coach to bogie through bolster beam. It houses traction pin, lateral bump stop and longitudinal bump stop.

5.6.2 Lateral Bump stop

Lateral Bump stops are provided to avoid excessive relative movement between coach and bogie in case of any irregular oscillation or jerk in lateral direction, due to defective track or rolling stock or loading/operating characteristics. Lateral bump stop is provided on side wall of support frame with a gap of 25 $\pm$ 5 mm.

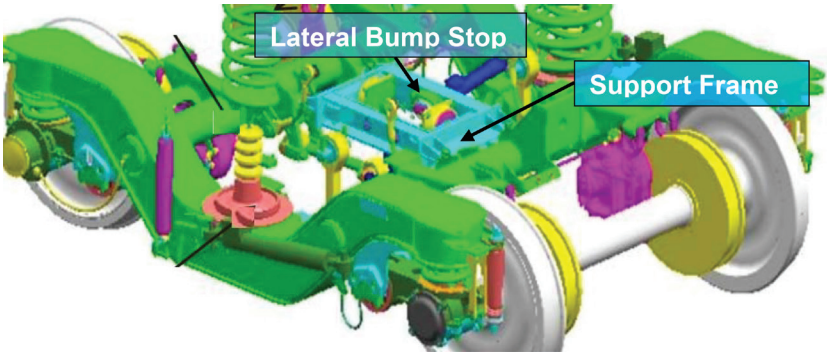

Support frame and Lateral Bump stop

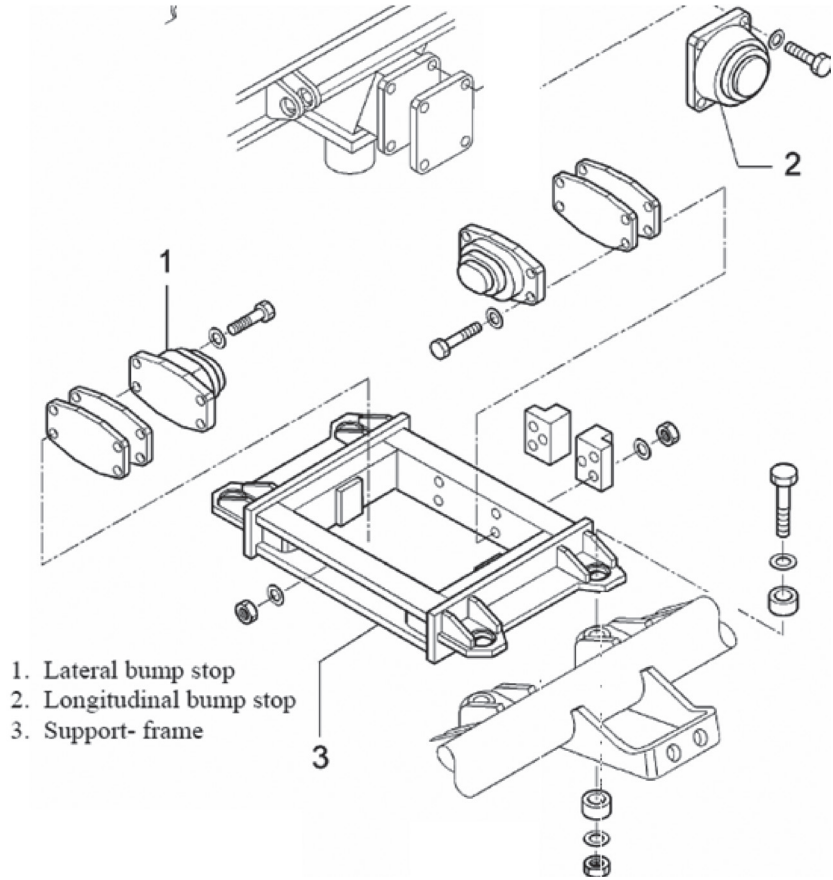

Exploded view of Support frame, Lateral and Longitudinal Bump stop

5.6.3 Bolster pin

This part is attached to the bottom of bolster beam on one end and traction center on the other end with locking plates and screws. It acts as a central pivot for transfer of longitudinal and lateral forces without any flexibility for rotation.

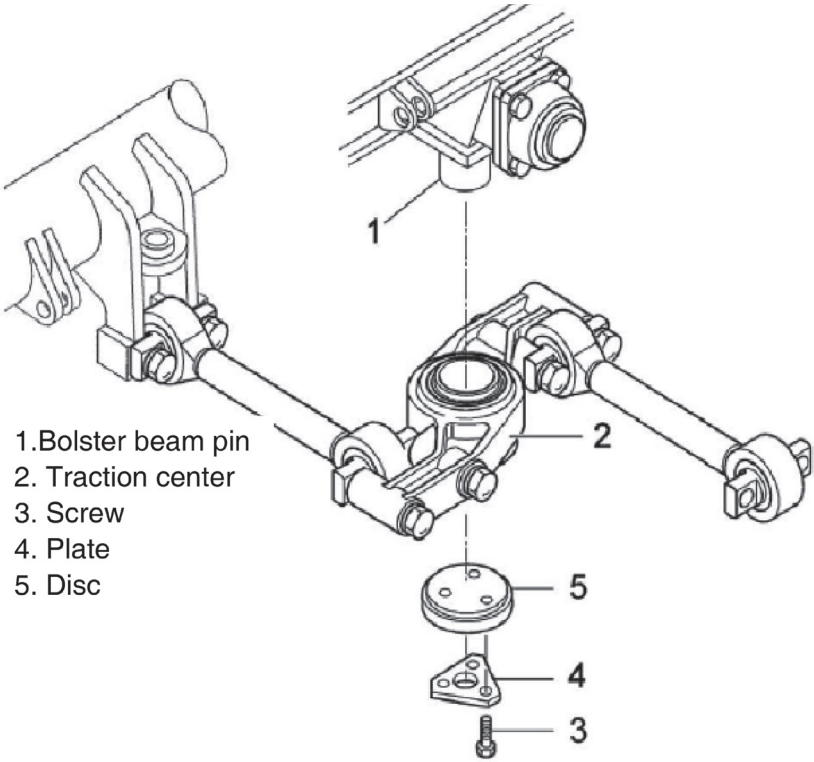

Exploded view of Traction center, traction rod and lever

5.6.4 Longitudinal Bump stop

Longitudinal Bump stops are provided to avoid excessive relative movement between coach and bogie in case of any irregular oscillation or jerk in longitudinal direction, due to defective track or rolling stock or loading/operating characteristics. Longitudinal bump stop is connected to bolster pin and supports against front and back walls of support frame with a gap of 8 +5/-2 mm.

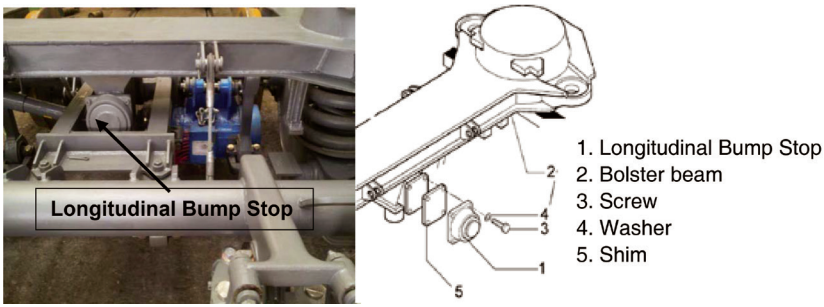

Longitudinal Bump stop

5.6.5 Traction center

It is provided at the level of axles and connected to cross beams with the help of traction rod joining the arm of traction center (i.e. traction lever). The bolster pin is joined to this traction center with locking plate, screw and silent bushes.

5.6.6 Traction rod

Two rods connecting traction center to cross beam in opposite direction (i.e. one to front cross beam and another to rear cross beam). This connection transfers all traction and braking forces between bogie & coach and also allows curvilinear movement of coaches.

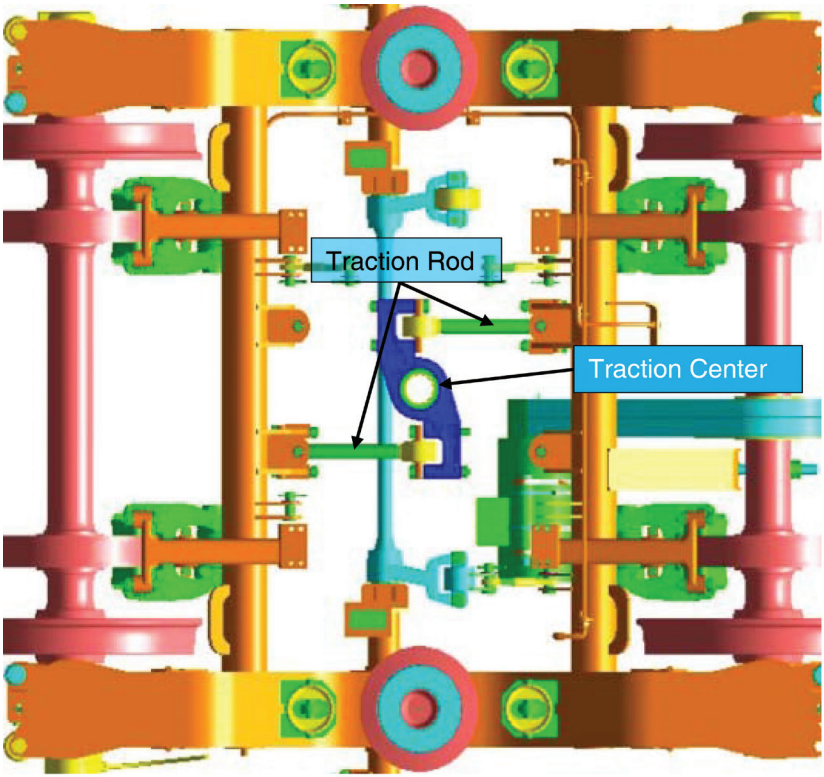

Traction center and Traction rod

5.6.7 Items to be Checked:

Item	To be checked for	How to check	Repercussion
Traction center, Traction lever, Traction rod	Crack, Damage and Corrosion	Visually, DPT	Uneven transmission of longitudinal and lateral force, Angularity
	Free movement, Blockage by foreign object	Visually	Resistance on curve

Traction center rubber bush,	Loose, Missing, Damage, detachment, Crack - Depth of Crack ≯ 6mm	Visually	Excess play, Impact while transmission of longitudinal and lateral force
Traction lever bush and plate		Visually, Calliper	Play, Angularity and vertical lift un-checked
Traction lever ball / elastic joint	External conditions, Detachments, Crack (without sharp edges)- Depth of Crack ≯ 8mm	Visually, Calliper	Excess play, Impact while transmission of longitudinal and lateral force
Lateral Bump Stop	Projected Length ≮ 30 mm, Loose, Missing, Damage, Crushed, Crack - Length of Crack ≯ 60 mm Depth of Crack ≯ 7 mm	Visually, callipers	Play, Lateral and longitudinal jerk
Longitudinal Bump Stop	Loose, Missing, Damage, Crushed, Crack - Length ≯23.5mm	Callipers	Play and Longitudinal Jerk

6 Primary Suspension System

Primary suspension is provided between axle and bogie frame. Primary suspension consists of a control arm, a set of steel coil springs and a vertical hydraulic damper at each wheel, i.e. 4 sets per bogie.

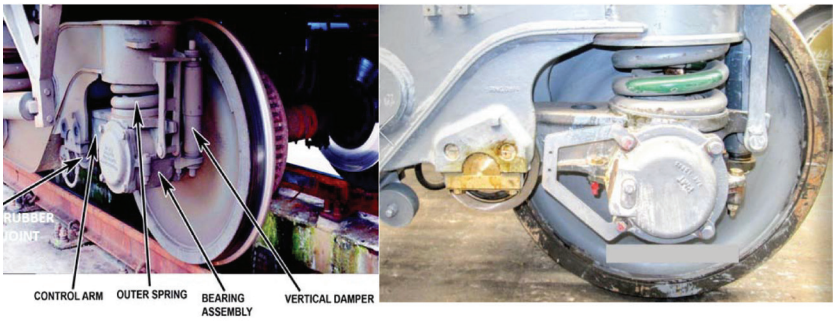

Primary suspension system

6.1 Control Arm

The control arm is an articulated arrangement which connect the axle with 'Y' frame. It is fitted with twin-layer elastic joint connecting the axle bearing to the bogie frame. This flexible arrangement controls lateral and longitudinal movement of axle and also transmits lateral, longitudinal and part of the vertical forces from / to axle. It helps the bogie to safely negotiate the curved track. For above functions to perform the gaps and plays are closed by using rubber joint element. The rubber elements separate the primary suspension from the bogie to reduce noise.

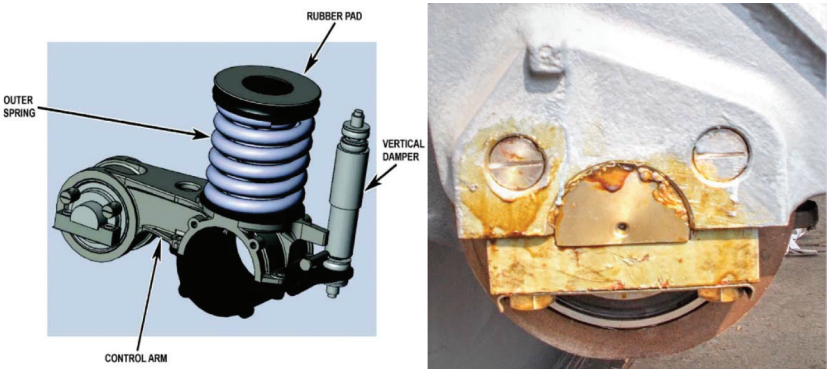

Control arm

6.1.1 Items to be Checked:

Item	To be checked for	How to check	Repercussion
All fixing	Loose, Missing	Visually	Excessive play, Increased angularity, Increased oscillation Uneven load transmission
Control arm part	Damage, Crack, Corrosion mark	Visually	
Control arm bore	Diameter (≯ 230.5 mm)	By calliper/ Go No-go gauge	
Control arm silent block, rubber element in ball joint	Crack (≯ 10 mm), Damage, Ageing, Detachment	Visually, By calliper	
Bottom strap of control arm	Looseness, Missing screw	Visually	Angularity, Oscillation
Control arm	Displaced, crack, heat/ burn mark	Visually	Excessively heated bearing, Angularity, Oscillation

6.2 Primary Spring

Primary springs consist of nested steel coil spring (internal and external) such that the direction of inner spring is opposite to the direction of outer spring and placed at a pitch of 90^0. It is seated on upper part of the control arm on all the four bearings. Centering disks, Rubber pad and adjustment shims (if required) are provided to properly seat the spring. The primary spring transfers vertical load to the axle. It also helps the bogie to negotiate the twist in track.

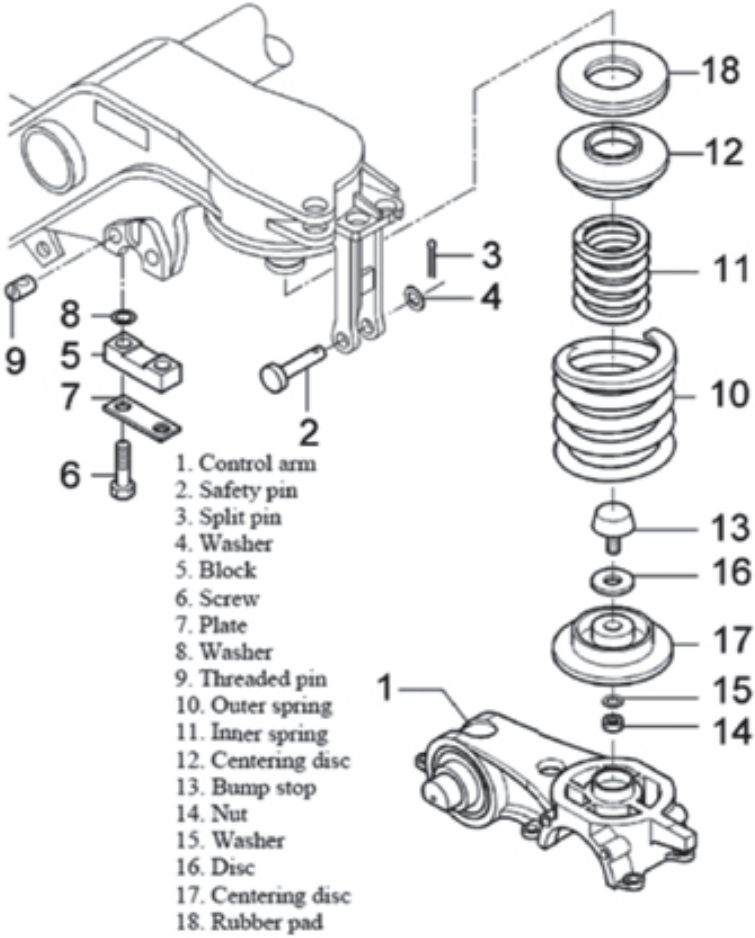

Exploded view of Primary Suspension system

Positioning/Pairing of springs:

Primary springs are to be positioned in bogie such that the diagonally opposite spring sets are mirror image of each other, as follows -

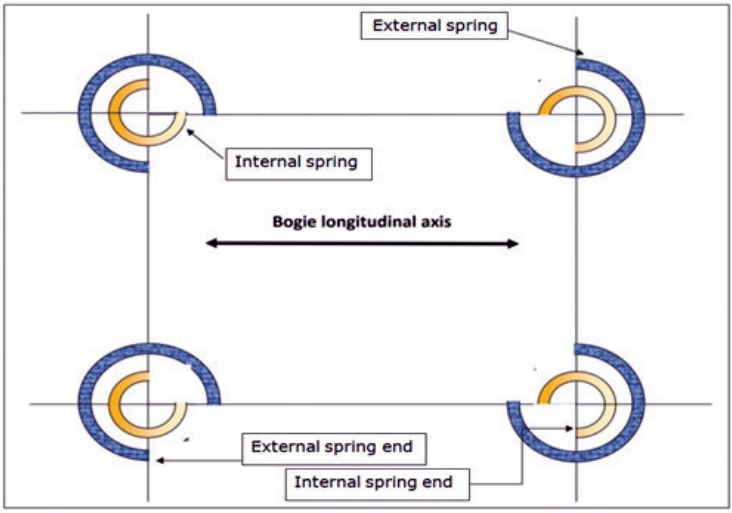

Line diagram for pairing of Primary spring

Colour Coding of springs -

All coil springs to be used in LHB coaches are grouped in different colour codes as per their basic properties. The colour codes for different coaches needs to be observed. The detailed properties and colour code for different primary springs are enclosed as Annexure- I.

6.3 Bump stop

Bump stop is provided in the core of nested springs to avoid tilt of bogie and coach in case of failure / excessive deflection of primary springs and allows bogie to rest on Bump stops. These are subjected to wear and may result into crack, crushing, ageing.

Centering disc Bump stop bottom	Bump stop top welded in Y frame

What to check	means	Limiting value
Crack, Without sharp edge, External condition, Detachment	Calliper, Visual	Depth of crack $\not>$ 8mm
Permanent deformation	Gauge clipper	Height of Bump stop $\not<$ 22mm

6.3.1 Items to be checked:

Item	to be checked for	How to check	Repercussion
Spring	Damage, Crack and Breakage	Visually	Weak, Ineffective, offloading
	Permanent set	Testing of spring for free height	
	Load deflection characteristic	Testing as per specification	
	Match with the group colour	Visually	Not suitable, offloading
Rubber Pad	Damage, Breakage, Crack ($\not>$10 mm), Deformation (Thickness $\not<$ 30.7 mm)	Visually, By Callipers	Excessive vertical oscillation, offloading.
Bump stop	Damage, Crack, Breakage	Visually	Offloading in case of failure of coil springs

6.4 Speed potential in failure en-route of outer coil spring -

The LHB Coach is permitted to run up to the destination with escorting C&W staff at a restricted speed of 80 Kmph, subject to following : -

a) Only one outer spring is broken and all other coil spring/air springs in primary as well as secondary suspension are in good condition.

b) The primary outer spring is broken at one location. The corresponding rubber pad & primary bump stop must be intact and there should be no oil leakage or any physical damage to the primary vertical damper. Further the control arm lug should not have any marks of hitting with the head brackets.

c) The spring is not displaced from its position.

6.5 Primary Damper

The vertical hydraulic damper is connected in between the lower part of the control arm and the bogie frame near all the four wheels of bogie. It is provided to dissipate the vibration energy and to dampen violent vertical oscillation at the earliest.

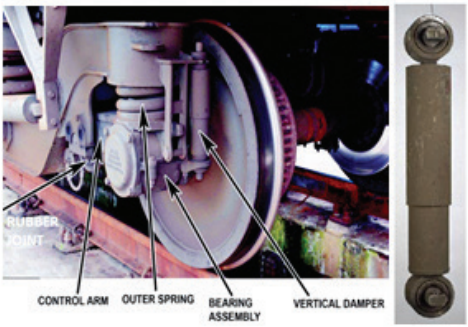

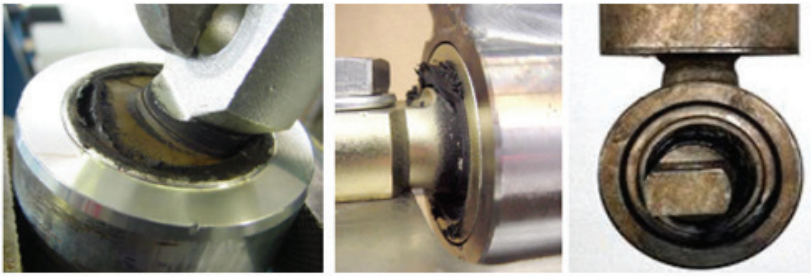

Primary damper and Ball joint

6.5.1 Items to be checked:

Item	To be checked for	How to check	Repercussion
Damper Replacement after 6 years mandatory	Deformation, damage, Crack, Oil leakage	Visually	Weak, Ineffective large and persistent vertical oscillation
	Ageing		
Fixing/ fastener and rubber element	Loose, Missing, Crack, Ageing, Detachment	Visually	Excessive play, damper will be ineffective

7 Curve Roll and Restrictor

Curve Rolls are provided at the two outer corners of the bogie frame i.e. front of the leading trolley and back of the trailing trolley (two per bogie and four per coach). It acts in conjunction with the Restrictors provided in front and back of coach body (four per coach) to restrict excessive relative rotation of coach w.r.t. bogie and vice-versa in case of angularity, specially on steep curves.

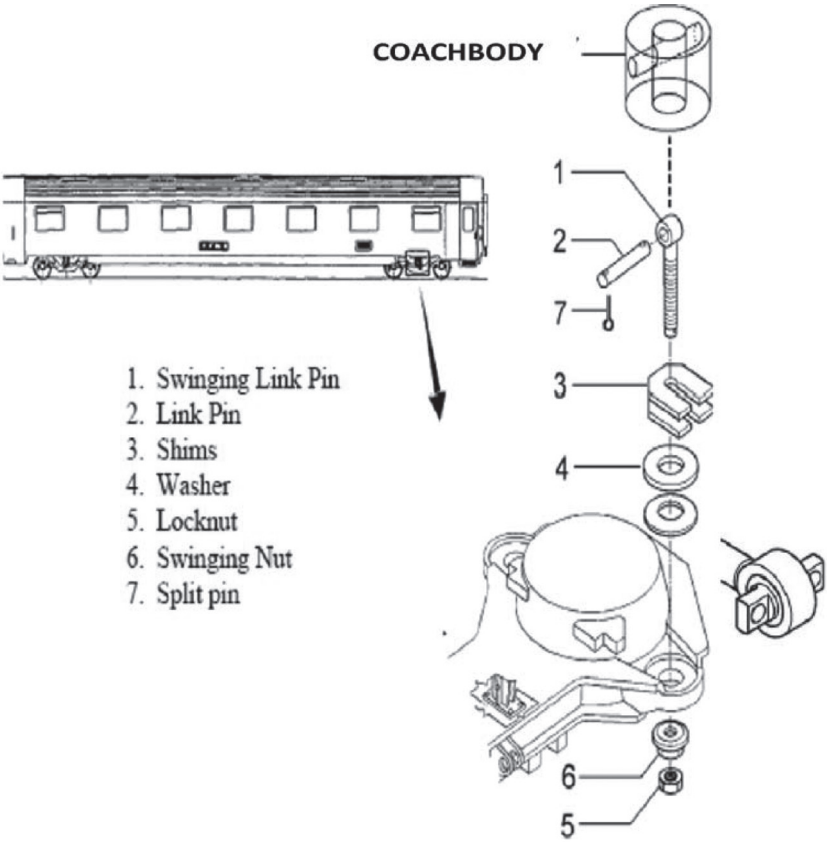

Exploded view of Bogie Body connection

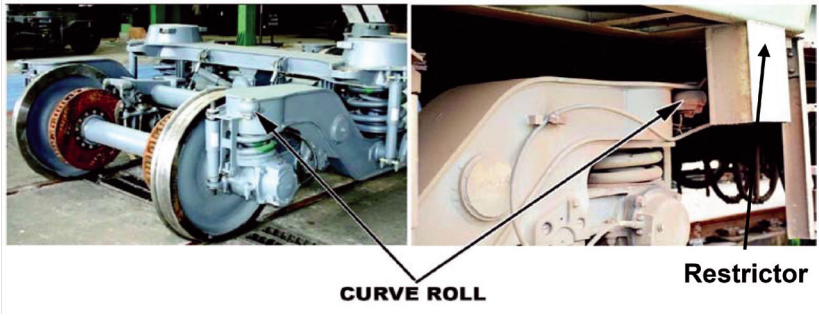

Curve roll and Restrictor

7.1 Items to be checked:

Item	To be checked for	How to check	Repercussion
Corner roll and Fittings	Loose, Missing, Crack, Damage	Visually	Ineffective, Excessive bogie rotation, Angularity
Restrictor	Damage, Deformation	Visually	Excessive relative rotation at curves

8 Axle Bearing and Wheel Slip protection

The axle bearing are self contained, preassembled, pre-lubricated taper roller cartridge type bearings. The manufacturing/ overhauling details of bearing is available on end plate of bearings. The overhaul cycle is 1.2 million km. The axle bearings on the bogie are fitted with sensors for detecting speed (whose signal is elaborated by the Wheel slip protection (WSP) system) and a current return device to avoid damage to bearings.

The WSP device receives signal in case of differential rotations in same bogie/ coach due to any defect in braking system. Automatic brake is released on wheels moving slower on an axle/ bogie/ coach.

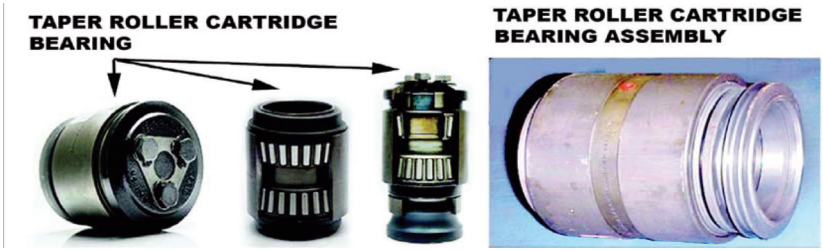

CTRB Bearing

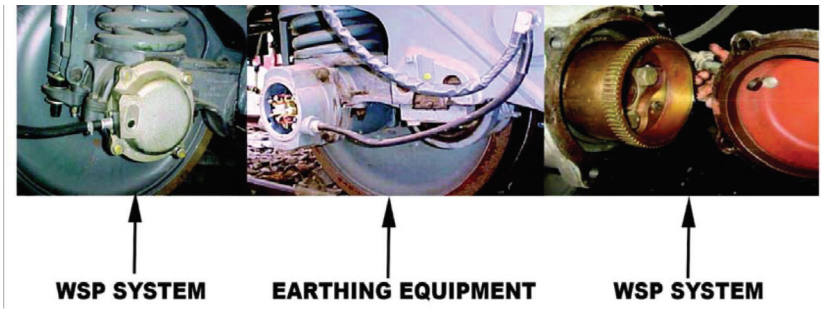

WSP system, Earthing equipment

8.1 Items to be Checked:

Item	To be checked for	How to check	Repercussion
Bearing	Temperature ≯ 80° C	Non-contact type infra-red thermometer Compare with mate bearing on same axle and bearings on same coach	Angular wheel movement, Longitudinal jerk
Bearing	Any abnormal condition	Rotate the bearing assembly	If any roughness is detected while rotating, the bearing is not fit.
Front cover of bearing	If two or more axle end bolts of different pairs are found loose or missing	Visually	Angular wheel movement, Longitudinal, Lateral and Vertical oscillation
Bottom strap of control arm	Loose or Missing screws		
Control arm	Displaced, crack, Heatburn marks	Visually	Excessively heated bearing, Angularity, Oscillation
All grounding cables, WSP equipment, Speed sensor	Break, Damage, Dislodged/open/ missing	Visually	Bearing will behave abnormally. WSP will behave abnormally.
	functioning of WSP	Verify that the signal arrives correctly to the diagnostic equipment.	
	Earthing equipment for wear spring mechanism for self-regulation.	Visually	

9 Wheel & Axle

Wheel profile should be checked with tyre defect gauge to ensure the profile dimensions are within the permissible limits. Coaches with wheels having thickness and profile worn below condemning limit, may cause excessive oscillation, higher lateral forces, offloading, jerk and poor guidance of wheel during movement.

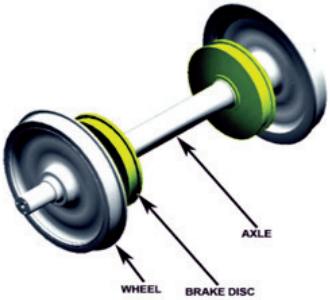

Wheel and Axle

9.1 Tyre Defects

Tyre defect gauge suitable for BG high speed coaching stock is used.

9.1.1 Thin Flange

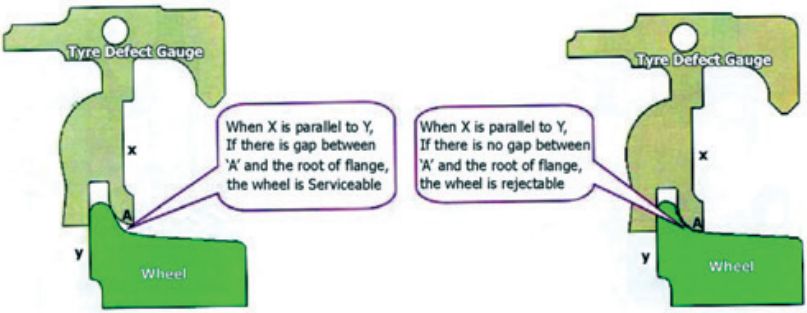

Thin flange

Item	To be checked for	How to check	Repercussion
Flange	Thickness $\not<$ 22 mm	Measured at a depth of 13 mm from the tip of the flange	Chances of bursting of point due to entering of flange between Tongue and Stock rail Excessive oscillation, Lateral / derailment forces, Increased angularity of wheels

9.1.2 Sharp flange

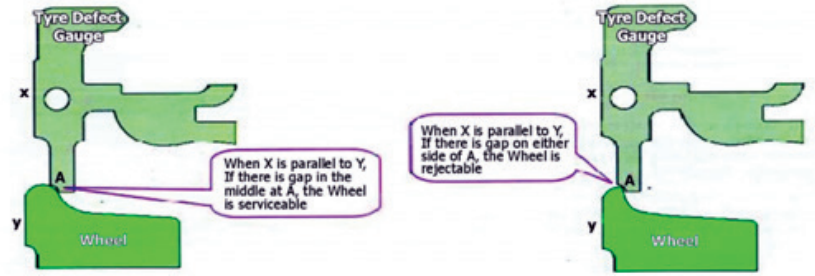

Sharp flange

Item	To be checked for	How to check	Repercussion
Flange	Radius of the tip of the flange reduced from 14.5 mm (New) to less than 5 mm (Condemn)	Checked at the tip of the flange as shown in the figure with a Tyre defect gauge.	Two roads at slightly gaping points. Chances of bursting the points due to entering of sharp flange between tongue and stock rail. Wheel flange bites the rail causing high frictional force and mounting of flange on the rail. Higher oscillation due to inadequate transition from wheel tread to flange.

9.1.3 Deep Flange

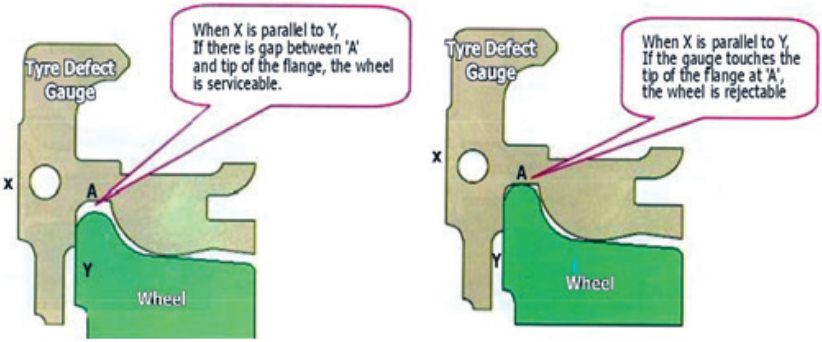

Deep flange

Item	To be checked for	How to check	Repercussion
Tread	Height of the flange more than 35 mm (New-28.5 mm)	Place tyre defect gauge as shown above. Measured from the flange top to the point on the wheel tread 63.5 mm away from the back of wheel.	Shearing of fish plate bolts at rail joint Hitting at heel block leading to track damage and excessive oscillation

9.1.4 Hollow Tyre/False Flange

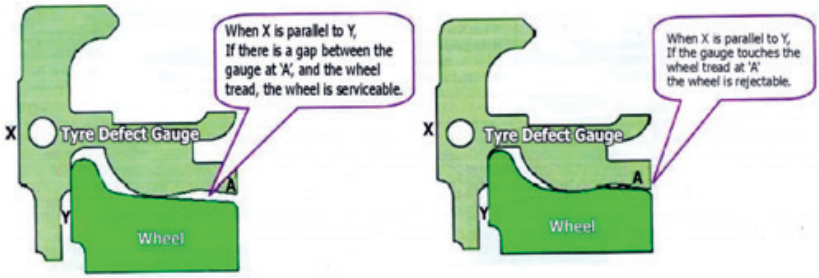

Hollow tyre/ false flange

Item	To be checked for	How to check	Repercussion
Flange & Tread	The projection of outer edge of the tread is above the central portion of tread by more than 5mm	Place the tyre defect gauge as shown in the figure above.	A false flange may split open points while travelling in trailing direction. Wheel with the false flange also may mount on nose of crossing in facing direction.

9.1.5 Flat tyre

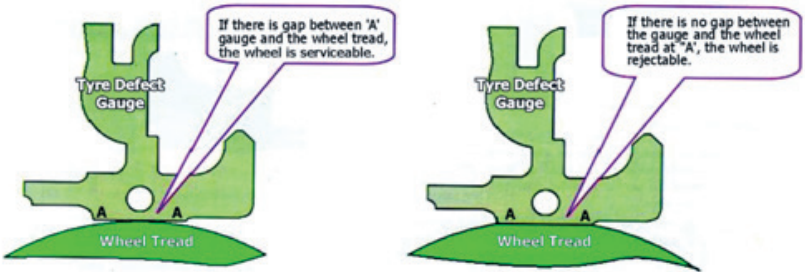

Flat tyre

Item	To be checked for	How to check	Repercussion
Rim/ Tread of wheel	Flatness of the wheel should not be more than 50 mm on the circumference of the wheel tread	Place the tyre defect gauge as shown in the figure above	Chances of rail fracture due to hammering of wheel on rail May also cause thermal cracks on wheel tyre

9.1.6 Worn Root

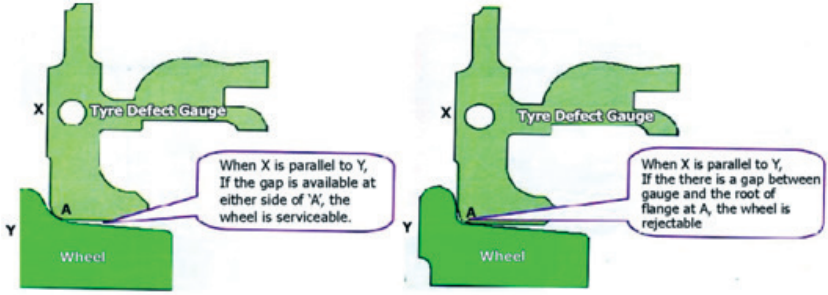

Worn root

Item	To be checked for	How to check	Repercussion
Radius of Root (Junction of Flange & Tread)	Radius of the root shall not be less than 13 mm in service. (New 16 mm)	Place the tyre defect guage as shown in the figure above.	Contact face of wheel flange almost become vertical resulting in increase of effective flange depth. Excessive lateral oscillation result in chances of mounting of flange over rail.

9.2 Thermal Wheel Defects

These defects are caused due to heating of wheel tyre, highly loaded plastic deformation of tyre surface. The visual inspection of wheels shall be more focused to catch these flaws. The following wheel conditions should be paid special attention during the visual inspections of the wheel.

9.2.1 Shattered Rim

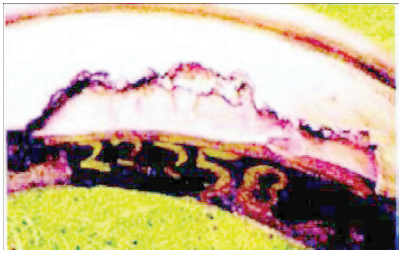

A wheel with a fracture on the tread or flange. This does not include wheels with localized pitting or flaking without presence of any other

rejectable condition.

Repercussions - Impact load, Severe oscillation, Offloading

9.2.2 Spread Rim

If the rim widens out for a short distance on the front face, an internal defect may be present. Spreading of the rim is usually accompanied by a flattening of the tread, which may or may not have cracks or shelling on the tread.

This condition should not be confused with a uniform curling over of the outer edge of the rim around the entire wheel, which is called rim flow. Rim flow is not a defect.

Repercussions -Impact load, Severe oscillation

9.2.3 Shelled Tread

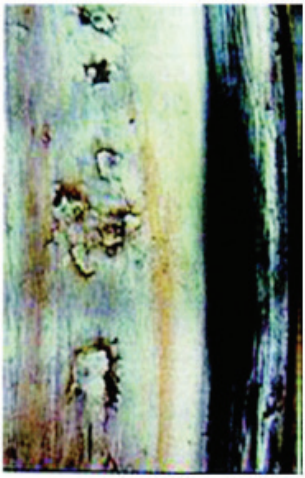

Shelling can be identified by pieces of metal breaking out of the tread surface in several places more or less continuously around the rim. Shelling takes place when small pieces of metal break out between the fine thermal checks. These are generally associated with small skid marks or "chain sliding." Railways are facing the problem of wheel shelling on LHB coaches. The shelling limit is as follows

Depth of shelling marks $\not>$ 1.5 mm.

Length of shelling marks $\not>$ 40 mm

Repercussions –

Impact load, Severe oscillation

9.2.4 Thermal Cracks

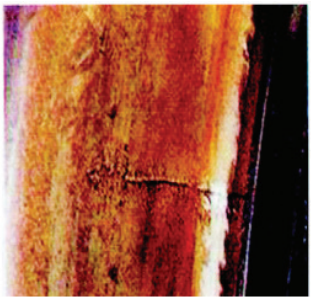

Thermal cracks appear on a wheel due to intense heating of the wheel arising out of slipping or skidding of wheels. Such cracks occur on the tread and generally progress across the tread in a transverse & radial direction.

Such wheels may be identified by presence of flat places (even within acceptable limits) and severe discoloration or blue black heating marks on the tread.

9.3 Wheel Gauge

There should be no variation in the values of wheel gauge -measured at three points 120 degrees apart on a wheel set. However the actual value of the wheel gauge can vary as per tolerances given in Table -

Wheel gauge	
Standard	1600 mm
Maximum	1602 mm
Minimum	1599 mm

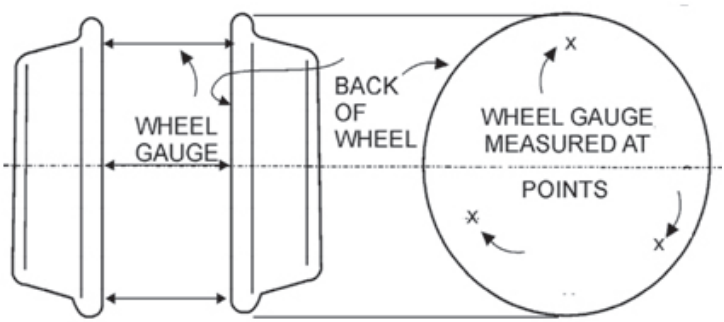

Measurement of wheel gauge

Measurement of Wheel Gauge are recorded duly indicating the following:

a) Tightness or slackness of gauge

b) Whether any indication exists about shifting of wheel on the axle.

Note:

It must be ensured that the back surfaces of wheels are cleaned thoroughly before measuring the wheel gauge in order to avoid erroneous readings.

Wheel gauge to be checked in no load condition.

Repercussions

- Reduced or increased wheel play
- If the wheel gauge is more than permissible limit, there exists a possibility of a relatively newer wheel hitting the nose of crossing.
- If the wheel gauge is less than minimum value, there is a possibility of wheel hitting at the back of a tongue rail while passing through the switch and thus damaging the tongue rail.

9.4 Bent Axle

A bent axle starts wobbling during motion causing severe vibrations. In order to confirm whether an axle is bent or not, it must be checked carefully on a sensitive machine or measuring table. Different value of Wheel gauge at different locations on a wheel set indicates bent axle.

9.5 Wheel Diameter on Tread

Wheel diameter is measured on the tread at a distance of 63.5 mm from the inside face of the wheel with a wheel diameter gauge.

Permitted variation in diameter		
Same axle	Same bogie	Same coach
0.5 mm	5 mm	13 mm

Wheel Diameter New = 915mm Condemn size = 845mm

10 Bogie Brake Equipment

The Bogie Brake equipment includes brake cylinder, brake calliper, brake shoes with snap lock gates and brake discs. U-series brake cylinders with automatic slack adjustment are used to operate the friction brakes in rail vehicles. The automatic slack adjustment is provided to take care of loss in the clearance due to wear (abrasion) on brake pads and brake discs. The braking force is generated by charging the braking cylinder, which intern press the brake pad against the brake disc. Each axle is equipped with two brake discs.

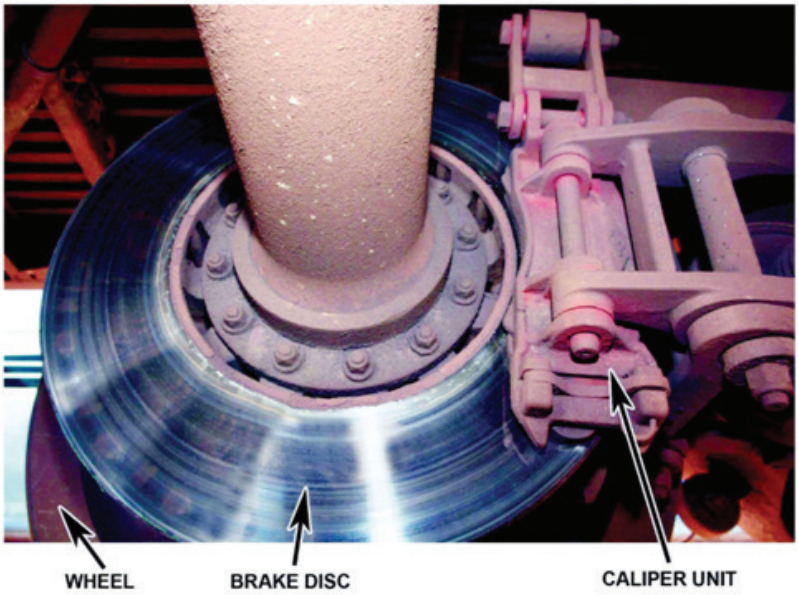

Axle mounted brake disc with caliper unit.

10.1 Items to be checked

Item	To be checked for	How to check	Repercussion
Brake Cylinder bellows, Brake levers and Hand brake equipment	Externally for damage, cracks	Visually	Improper working of brake system, Unequal braking, Increased Brake application/ release time, Partial braking
Slack adjuster mechanism	Soiling and associated working	After opening the assembly	
Steel piping and hoses	For cracks/ damages/ ballast hitting and leakages	Visually	
Calliper pin joints	Free movement	Visually	
Brake pad	Wear (residual thickness≮5 mm)	Callipers	Differential brake application
Brake-disc, Fastening screws	Wear, defect, damage, thermal or fatigue cracks, broken ribs, loose, axial movement along the axle (Free movement)	Visual	Unequal braking
Brake shoes	Clearance shall be approx. equal on both side of same disc andindividual and total shallbe 1-1.5 mm	Callipers	Uneven braking
Gap between pins and bushes	1 mm	Callipers	Affect the braking force

11 Coupler & Buffing Gears

The connection between two adjacent vehicles within a train set is done by a "Coupler System" which is consisting of the coupler itself and a draw and buffing gear. The center buffer couplers are able to transmit both the tensile and the compressive forces. Further the tight lock coupler by its special design hinders the climbing of the vehicles in case of an accident. The AAR type H coupler has some limitation on transition curves. The "Coupler System" allows a vertical angle of deflection of ± 7° and horizontal angle of deflection of ± 17°. The Main components of the coupler system are Tight lock coupler head, Drawbar Guide (Supporting device) and Draft gear.

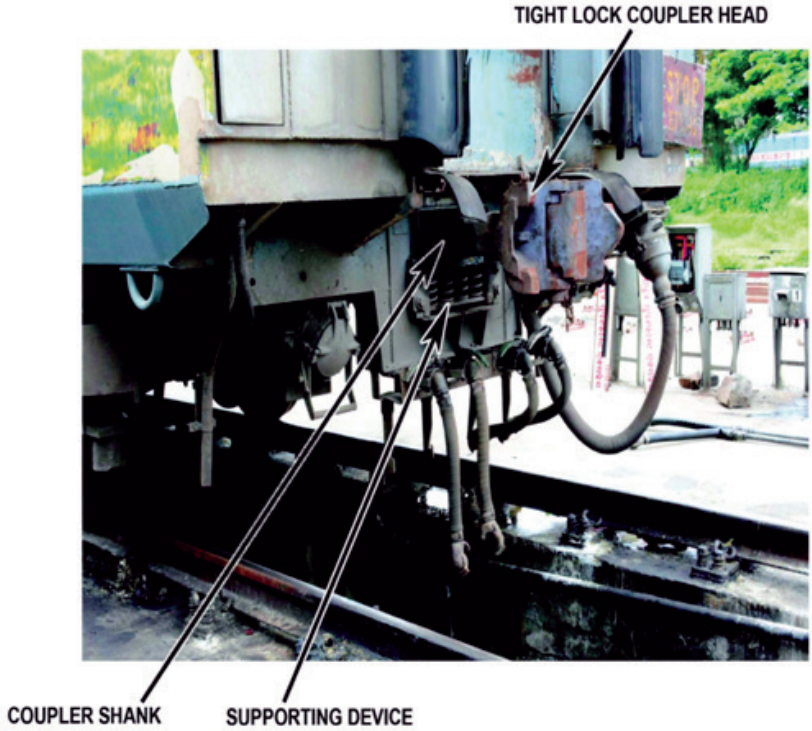

Coupler assembly

11.1 Tight lock coupler head (AAR type H)

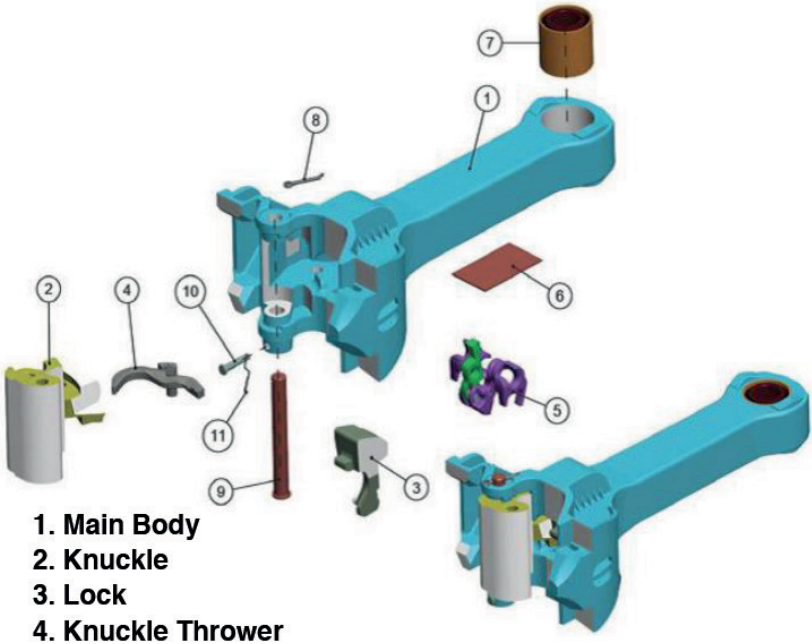

1. Main Body
2. Knuckle
3. Lock
4. Knuckle Thrower
5. Rotary Lock Lift Assembly
6. Wear Plate
7. Spherolastic Silent Block
8. Split Pin for Main Pin of Knuckle
9. Support Pin for Main Pin of Knuckle
10. Split Pin for Support Pin

Exploded view of CBC Head

11.2 Drawbar guide (Support)

The Supporting device comprises of four preloaded compression springs. The device is placed on a platform and bolted to the coach structure. The coupler head rests on the top wear plate of the Supporting device and this device supports the coupler weight.

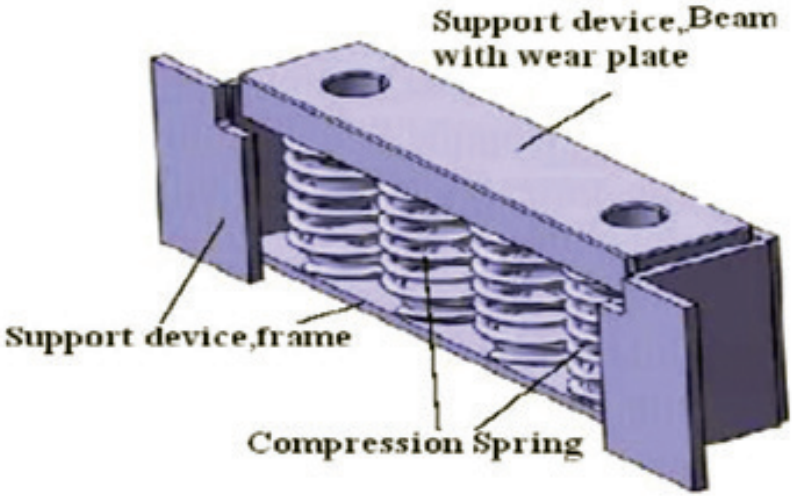

Supporting device

11.3 Draft Gear

The draft gear is a double acting (drawing & buffing) device for energy absorption. The device is designed to fit into the draft gear pocket of the coach and absorbs the dynamic energy in both draw and buff modes.

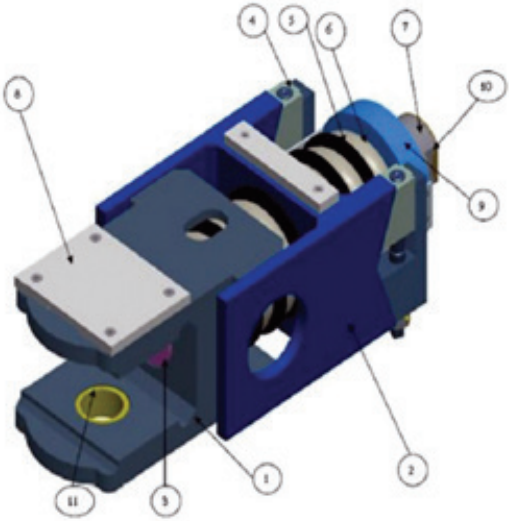

1 Front Fork (Buff Plate)
2. "H" Housing
3. Main Bolt
4. Wedge Key sub assembly
5. Intermediate Plate
6. Elastomeric Pads
7. Round Nut
8. Front Wear Plate
9. Rear Stopper Plate sub assembly
10. Lock Washer for BDG Main Bolt
11. Bush

Draft Gear

11.3.1 Items to be checked:

Item	To be checked for	How to check	Repercussion
All bolt connection	Loose / broken / missing nut and bolt	Visually	High longitudinal forces, Jerk and movement.
Coupler head	Free movement in horizontal and vertical direction.	Manually	Capacity to negotiate vertical and horizontal curve is restricted.
Coupler assembly	Free slack ≯ ½ in	Measure manually	High longitudinal forces, Jerk and movement.
Coupler height	1105 – 1030 mm (Coupler wear plate, Shims may be inadequate)	Measurement Vertical center of Knuckle or center of shank to rail level	Misaligned Longitudinal forces lead to offloading Restricted Capacity to negotiate vertical & horizontal curve.
Coupler supporting device Equalizer springs or bolsters	Worn, Collapsed or broken spring/ Cracks, Breakage	Visually	Coupler height may change
Coupler shank wear plate	Wear ≯ 3/16 inch	Measurement	Drooping

Coupler Wing Limit	Excessive wear to the front face and pivot lug or distortion to the guard arm or interlocking lug	Using aligning wing limit gauge	May open up, Parting of Trains, Lateral Oscillations
Vertical height of aligning wing Vertical height of guard arm	Excessive distortion and vertical height of Aligning Wing and/ or Guard Arm of the coupler head	By Vertical height aligning wing pocket and guard arm Gauge	May open up, Parting of Trains, Lateral Oscillations

12 Coach Under Frame

The front part of under frame is made by joining head stock and body bolster. Two side sills of sole bar are made of W section. Cross members of the frame are made of folded channel sections. Floor is made of corrugated sheets. Corrugated trough floor is plug welded from top with the cross members.

12.1 Items to be checked

Item	To be checked for	How to check	Repercussion
Under frame	Loose and hanging parts, Fresh damage, Bent parts	Visually	The connected part will not be secured in position and not able to perform the desired action.
Air brake frame, Air brake pipe lines	Damage, crack	Visually	
Head stock, sole bar, Gusset plate, cross member, welds, body pillars	Damage, Crack, Welds sole bar near yaw damper bracket	Visually, DPT	

13 Summary of defects of FIAT Bogie and LHB Coach

S N	Item of Inspection	Measurement Method/ Equipment	Permitted Range/ Condition
1	Bogie frame and connected parts of bogie.	Visually, DPT	Should not have cracks or damages at critical locations. Should not have loose connections. Height of the bogie frame top from rail level 925+0/-5 mm Maximum No of shims at bogie-body connection 08 Nos. (1 metal shim = 05 mm)

2	Control Arm, its parts, rubber elements and bore.	Visual, Callipers, Go - No Go gauge.	Damages, Cracks, Detachments, Corrosion marks and sign of aging. Bore Diameter (≯ 230.5 mm). Rubber element in ball joint should not have cracks ≯ 10 mm. Two or more axle end bolts should not be loose or missing. Screws of different pairs of bottom strap of control arm should not be loose or missing. There should not be any heat/ burn marks. Clearance between safety pin and lug of control arm - Top=45 mm, Bottom= 37.5 mm Height from rail level to the control arm bracket## Variation in this height at all locations on bogie##
3	Primary Spring	Visual, Free height of spring, Colour of paint on spring	Damage, cracks and breakage. Permanent set, Load deflection characteristics. Primary Spring height - As per Annexure I Colour of paint on spring should match with group colour.

S N	Item of Inspection	Measurement Method/ Equipment	Permitted Range/ Condition
4	Rubber disc and bump stop for primary suspension	Visually, DPT.	Damage, cracks and breakage Clearance between primary vertical bump stop gap 8mm Maximum number of shims at vertical bump stop##
5	Dampers (Primary, Secondary and Lateral)	Visually	Deformations, damage, cracks and oil leaks, Ageing. Replacement after 6 years is mandatory
6	Fixings/ fasteners and rubber elements	Visually	Loose, Missing, Cracks, Ageing, Detachments
7	Bolster beam and assembly	Visually, DPT,	Damages, cracks and breakages Height of bogie bolster base plate (machined surface) from rail level (Tare) - 930 + 6/-2 mm Variation in this height at all location on bogie##
8	Secondary suspension Steel Coil Spring and Rubber spring	Visually, Testing of spring for free height Testing as per specification Colour of paint on spring	Damage, cracks and breakage. Permanent set Load deflection characteristics. Colour of paint on spring should match with group colour

S N	Item of Inspection	Measurement Method/ Equipment	Permitted Range/ Condition
8			Ageing, Crack, Damage, Detachments Height of Spring (Outer/ Inner) - As per Annexure II Clearance between Secondary Vertical Bump stop gap## Clearance between bolster beam upper spring seat from bottom surface to top surface of bottom spring seat (Bolster spring height)## Height of top plate of side frame to upper face of spring seat## Variation in this height at all locations##
9	Rubber spring	Visually, Calipers	Height of Spring – 235 mm (New) Horizontal length of crack ≯ 30 mm Vertical length of crack ≯ 10 mm Crack depth ≯ 4 mm
10	Rubber ring and miner pad	Visually, Calipers	Ageing, Crack, Damage, Detachments Crack: Horizontal length ≯ 10 mm; Vertical length ≯ 40 mm; Crack depth ≯ 5 mm Height 90 mm to 95 mm

S N	Item of Inspection	Measurement Method/ Equipment	Permitted Range/ Condition
11	Secondary suspension Air Spring, Air Suspension pipe, Installation lever & Limiting valve, Duplex valve, FIBA and Emergency spring	Visual, Calliper, By soap water, Pressure Gauge	Damage, Leakage, Bulging of bellow, Water collection in bellow, Corrosion of bottom and top mounting plate Height of air spring = 289 – 294 mm Height of installation lever Chocked valves Working of FIBA Isolating cocks for actuation of FIBA Cracks, Ageing, Detachments in emergency spring
12	Anti roll bar assembly	Visually, DPT	All fixings and fasteners, links and brackets, Pins, screws should not be missing, loose, cracked, having damages and corrosion. Depth of Crack in ball joint $\not>$ 10 mm Bearings Grease should not be oozing out.
13	All Rubber and Rubber/ Metal Bonded Components, Joints, Bushes, Seals, Fasteners.	Visually	Loose, Missing, Cracks, Damages, Ageing, Detachments

S N	Item of Inspection	Measurement Method/ Equipment	Permitted Range/ Condition
14	Traction center assembly	Visually, DPT, Calliper.	Examine traction lever and rods, and plates for cracks, damages and corrosion. Free to move, not blocked by any foreign objects. Bush - Loose, Missing, Damage, detachment, Crack Depth of Crack ≯ 6mm Ball joint- External conditions, Detachments, Crack (without sharp edges) - Depth of Crack ≯ 8mm Bump Stops shall not be loose, missing, cracked, damaged or crushed. Lateral bump stop – Projected length 30 mm, Crack - Length of Crack ≯ 60 mm, Depth of Crack ≯ 7 mm Clearance from traction center 25 mm+5/-2 Longitudinal bump stop – Length of Crack ≯ 23.5mm Clearance from traction center 8mm + 5/-2
15	Curve roll, Fitting, Restrictor	Visually	Loose, Missing, Crack, Damage, Deformation

16	Bearing	Using noncontact type infra-red thermometers, Visual With a dial indicator mounted on a magnetic base.	Check temperature (80° C) and compare with mate bearing on same axle and bearings on same coach. Look for sign of grease leakage. Rotate the bearing assembly and feel for any rough condition. Note down details of bearing from metal identification tag with the mounting date crimped to the outer case of the bearing. Examine front cover of bearing and bottom strap of control arm for Loose/ missing screws. Two or more axle end bolts of different pairs is not allowed to be loose or missing. Bearing mounted end play shall be within the limit. Bench End Play (0.58 - 0.64 mm). Mounted End Play at installation (0.096 - 0.330 mm).

S N	Item of Inspection	Measurement Method/ Equipment	Permitted Range/ Condition
17	Grounding cables wheel slip protection (WSP) equipment (S) Speed sensor	Visual	Examine all cables for breakages, damages, dislodged / open / missing Ensure functioning of WSP by verifying the correct signal arrival to the diagnostic equipment. Examine the earthing equipment for wear. Examine the spring mechanism for self regulation.
18	Brake gear assembly	Visual Calliper	Examine brake Cylinder bellows, brake levers and Hand brake equipment externally for damage, cracks. Examine slack adjuster mechanism for soiling and associated working Examine Vent/exhaust plug and bellows relief valve for obstructions. Examine air brake piping and hoses for cracks/ damages/ ballast hitting and leakages Examine calliper pin joints for free movement

S N	Item of Inspection	Measurement Method/ Equipment	Permitted Range/ Condition
18			Examine brake pad, brake-disc, fastening screws for wear, defect, damage, thermal or fatigue cracks, broken ribs, loose, axial movement along the axle (free movement). Look for groove near the periphery, it shall be visible. Wear (residual thickness 5 mm) Check brake calliper for correct operation Examine brake shoes for clearance which shall be approx. equal on both side of same disc; and individual and total clearance shall be within 1-1.5 mm. Permissible wear between pins and bushings of brake-disc shall be 1 mm. Clearance between brake disc bottom to Rail level 137.5mm

S N	Item of Inspection	Measurement Method/ Equipment	Permitted Range/ Condition
19	Center Buffer Coupler	Visual, Vertical Height Aligning Wing Pocket and Guard Arm Go - No Go gauge, Buffer height gauge	Look for loose / broken / missing nuts and bolts. Check whether movement in horizontal and vertical direction is free. Look for worn, collapsed or broken springs of supporting device. Check Shank wear plate Wearing ≯ 3/16 in. Check coupler wing Limit. Check vertical height of Aligning Wing and/ or Guard Arm of the coupler head. Examine whether CBC is drooping Standard Buffer height- 1030 mm to 1105 mm
20	Wheel defects. (Thin Flange, Sharp Flange, Deep Flange, Hollow Tyre/ False Flange, Flat Tyre, Worn Root.)	Tyre Defect Gauge (Go - No Go Gauge)	Check wheel tyre profile with Tyre Defect Gauge as shown in Para 10.1:- Thin Flange- Flange thickness reduces to less than 22mm thick Sharp flange- Radius at flange tip reduces to less than 5mm. Deep flange - Height of the flange becomes greater than 35mm.

S N	Item of Inspection	Measurement Method/ Equipment	Permitted Range/ Condition
20			Hollow Tyre/False Flange- Projection of outer edge of the wheel tread above / below the hollow of tyre exceeds 5mm then the worn tread is called Hollow Tyre and outer edge of wheel is called false flange Flat tyre- Maximum permitted flatness of wheel is 50mm Worn root - Root radius reduces to less than 13mm.
21	Wheel gauge	Wheel gauge	Maximum-1602 mm Minimum- 1599 mm
22	Wheel tread diameter	Wheel diameter gauge	Maximum-915 mm Minimum-845 mm
	Coach body	Visually, DPT	Under frame, Head stock, Sole bar, Gusset plate, Cross member, Welds, and Body pillars. Loose and hanging parts and for fresh damage, bent parts. Damages, cracks in welds connecting yaw damper bracket with sole bar, Restrictor, Part used in Bogie body connection

- The shop schedule limit for these measurements vary as per coach variant and Annexure 10.2 of RDSO LHB Maintenance

Manual Vol. II, 2022 may be referred for respective type of coach.

All rubber wear parts to be checked for external condition, cracks, detachment between rubber and metal parts and permanent set.

While assigning contribution in derailment each of the dampers should be associated with respective mode of vibration.

The elastic properties of rubber change during lifetime, due to molecular alterations of the material. This phenomenon is called 'ageing'. Cracks of Rubber component should be checked on cracks without sharp edges to know about the ageing.

14 Check list of important items for derailment investigation For FIAT (LHB) Bogie. As per latest proforma for carriage vide Railway Board letter No.2018/ Safety (A&R)/1/8 dated 25.01.2019

Sl. No. in Proforma	Item of Inspection	Measurement Instrument/ method
2	Date of incident & time	As per actuals
3	Train No	As per actuals
4	Details of BPC along with the name of the station, where issued and Engineer C&W who issued it.	As per actuals
5	Vehicle No	As per actuals
6	Type	As per actuals
7	Tare in tones	As per actuals
8	Carrying capacity in tones	As per actuals
9	Built date	As per actuals
10	Return date	As per actuals
11	POH Details	As per actuals
12 & 13	Station (from-to)	As per actuals
14	Position from the engine.	As per actuals
15	Wheel Gauge in mm (to be measured at three locations) measured in empty condition at the horizontal plane passing through the center of the axle.	Wheel Gauge
16(i)	Wheel Diameter Measurement	Wheel Diameter gauge
16(ii)	Record whether below condemning size (Yes/ No)	

17	Any indication of bent axle or wheel having shifted on axle	Visual, Wheel Gauge
	Wheel and axle face particulars in case of breakage of wheel/ axle.	visual
18	Axle face particulars. In case of breakage of any axle/wheel. 1L-1R, 2L-2R, 3L-3R, 4L-4R	Visual
19	Ultrasonic particulars on the hub of the disc in case of breakage of any axle/ wheel. 1L-1R,2L-2R,3L-3R, 4L-4R	Visual
20	Stamping particulars on wheel disc regarding manufacture RA/RD in case of breakage of any axle/ wheel. 1L-1R, 2L-2R, 3L-3R, 4L-4R	Visual
21	Observation after measuring the profile with wheel defect gauge (Good/ Reject able) (L)	Tyre Defect Gauge, Go-No Go Gauge
22	Observation after measuring the profile with wheel defect gauge (Good/ Reject able) (R)	Tyre Defect Gauge (Go No Go Gauge)
23	Condition of axle box rear and front covers/end cap (FIAT)	Visual
24	Roller bearing- Condition of face cover plate.	Visual
25	Condition of bearing seal & studs/locking plate and bolts (FIAT)	Visual
26	Condition of roller bearings and its components	Visual

27	Condition of coil suspension spring, i.e. Normal/ Fractured (Old/ Fresh)	Visual Inspection/ Measurement with Height Gauge/ Go-NoGo Gauge/ Measuring steel tape
28	Condition of Rubber spring i.e. Normal/ Cracked including length of crack, (For LHB only)	Visual, Steel rule
29	Condition of air spring including leakage in pipe.	Visual
30	Deflected height of coil spring after re-railing on level un-canted track	Measurement
34	Condition of Rubber Disc and Bump stop of primary suspension (For LHB)	Visual
35	Height of Bogie bolster base plate from rail level (For LHB)	Measuring tape/ Steel rule
41	Condition of Hydraulic Dampers	Visual
42	Condition of Anti-roll bar (For LHB)	Visual
45	Condition longitudinal / lateral flexibility of secondary spring (For LHB)	Visual, Force deflection test
46	Clearance between Support frame and longitudinal / Lateral Bump stop (for LHB)	Steel rule
47	Remarks regarding free movement of bolster and pivot and their condition	Visual

48	Condition of grounding cables, Wheel slip Protection (WSP), and speed sensor (For LHB)	Visual
49	Brake Gear	Visual
50	Buffer/ coupler Height (to be taken on an uncanted track after uncoupling and re railing (Front)	Visual / Buffer Height Gauge
51	Buffer/ coupler Height (to be taken on an uncanted track after uncoupling and re railing (Back)	Visual / Buffer Height Gauge
52	Condition of side buffers Working, dead, drooping, and entanglement.	Visual
53	Details of broken parts giving locations w.r.t point of mount and derailment and whether breakage considered due to Accident.	Visual
54	Any other defect in the vehicle which may have contributed to or caused the derailment such as condition of the coupler, draft gear pocket, shearing plate etc.	Visual
55	List of damages to the coach due to accident.	Visual
56	Other observations considered relevant to derailment.	Visual

Annexure –I

Details of Primary Spring for different variants of LHB Coach

PL No. (Drg No)	Nomenclature	No. of Coils	Free Height	Wire Dia	Outer Dia	Inner Dia	Height under Load KGF	mm	Colour Code
PRIMARY OUTER SPRING									
33503035 (1267411)	AC Two Tier	5.5	324.5	38	257	181+3/-0	2948	264+0/-4	Green
	AC Three Tier								
	Pantry Car								
	AC Ist Class								
	AC Chair Car(Ist)								
	AC Chair Car								
33500368 (1277142)	Power Car	5.75	337	40	259	179+3/-0	4825	252+0/-4	Yellow
PRIMARY INNER SPRING									
33503047 (1267412)	AC Two Tier	7.5	324.5	26	164	112+3/-0	1736	264+0/-4	Green
	AC Ist Class								
	Pantry Car								
	AC Chair Car(Ist)								
	AC Chair Car								
33500356 (1277143)	AC Three Tier	7.8	337	27	165	111+3/-0	2690	252+0/-4	Yellow
	Power Car								

Details of Secondary Spring for different variants of LHB Coach

SECNDARY OUTER SPRING									
33503060 (1269514)	AC Two Tier AC Ist Class Pantry Car AC Chair Car(Ist) AC Chair Car	6.6	707	50	418	318+3/-0	4796	512+0/-5	Green
33500400 (1268836)	AC Three Tier Power Car Side-II	7	702	55	427	317+3/-0	6041	515+0/-5	Yellow
33500381 (1277146)	Power Car Side-I	7	708	56	429	315+3/-0	7291	512+0/-5	Blue
SECNDARY INNER SPRING									
33503059 (1269513)	AC Two Tier AC Ist Class AC Three Tier Pantry Car AC Chair Car(Ist) AC Chair Car	8.3	663	34	280+0/-2	212	2575	468+0/-5	Green
33500393 (1268837)	Power Car Side-II	8.5	658	37	280+0/-2	206	3488	471+0/-5	Yellow
33500370 (1277145)	Power Car Side-I	8.7	664	38	281+0/-2	205	3947	468+0/-5	Blue

Annexure –III

Updated LHB coach variants with Transportation code

SN	Description of coach	Transportation code
1	EOG First AC Coach	LWFAC
2	AC-2Tier EOG Sleeper coach	LWACCW
3	AC-3Tier EOG Sleeper coach	LWACCN
	AC 3 Tier Coach (Humsafar)	LWACCNH
	AC-III Tier, Economy coaches	LWACCNE
4	Layout of LHB AC Hot Buffet Coach	LWCBAC
5	1st AC cum AC-2 Tier EOG Sleeper composite coach	LWFCWAC
6	1st AC cum AC-2 Tier Sleeper composite coach	LWFCWACA
7	AC Executive Chair Car	LWFCZAC
	AC Executive chair car (Tejas)	LFCZAC
8	AC Chair Car	LWSCZAC
	AC Chair Car (Tejas)	LSCZAC
9	EOG AC Track Recording Car	LRZAC
10	EOG AC Track Recording Staff Car	LRDAC
11	Data acquisition and analysis car (LHB EOG AC Oscillograph car)	LWOGCARAC
12	LHB EOG AC Observation Car	LACOC
13	Anubhuti Coach	LWAFCZAC
14	Brake, Luggage Cum Generator Car	LWLRRM
15	High Capacity LHB Power Car With 750 KVA DA Set	LWLRRMH
16	II AC Double Decker Chair Car (EOG) (Width 3135mm)	LWSCZDAC
17	II AC Double Decker Chair Car (EOG) (Width 3050mm)	LWSCZDAC-1
18	EOG Inspection Carriage (Administrative)	LRA

SN	Description of coach	Transportation code
19	EOG AC Inspection Carriage (Administrative)	LRAAC
20	EOG/HOG compliant AC Brake, Luggage cum Generator car (Single DA set) with compt. for Divyangjan passengers	LWLRRMDAC
21	EOG AC Vistadome coach	LWCTZAC
22	EOG AC-3 Tier Economy	LWACCNE
23	Pantry cum Dining car for Deccan Queen Exp. Platform	LWCBACDQ
24	High Capacity Parcel Van	LVPH
25	GS Coach (Antodaya)	LWS

EOG= End On Generation

HOD= Head On Generation

References

1. LHB Maintenance Manual Volume II vide IRCAMTECH/GWL/MECH/2022-23/LHB/Manual/1.1, July - 2022
2. Maintenance of Air suspension system vide CAMTECH/M/C/2010-11/Air Sus. System/1.0, November – 2011
3. IRICEN publication - The Investigation of Derailments, August 2014
4. IRCA Conference rule Part IV
5. Study Content available on internet

For any suggestions, errors etc, please contact
on Email : iricenmail@iricen.railnet.gov.in

Published by :

INDIAN RAILWAYS INSTITUTE OF CIVIL ENGINEERING

11-A, South Main Road, Koregaon Park, Pune - 411001.

Price ₹100/-